Desk Clock • Tower Bookcase • Small Box
Stub Tenon & Groove Joinery • Quick Finishing Fixes

Woodsmith®

Vol. 17 / No. 99

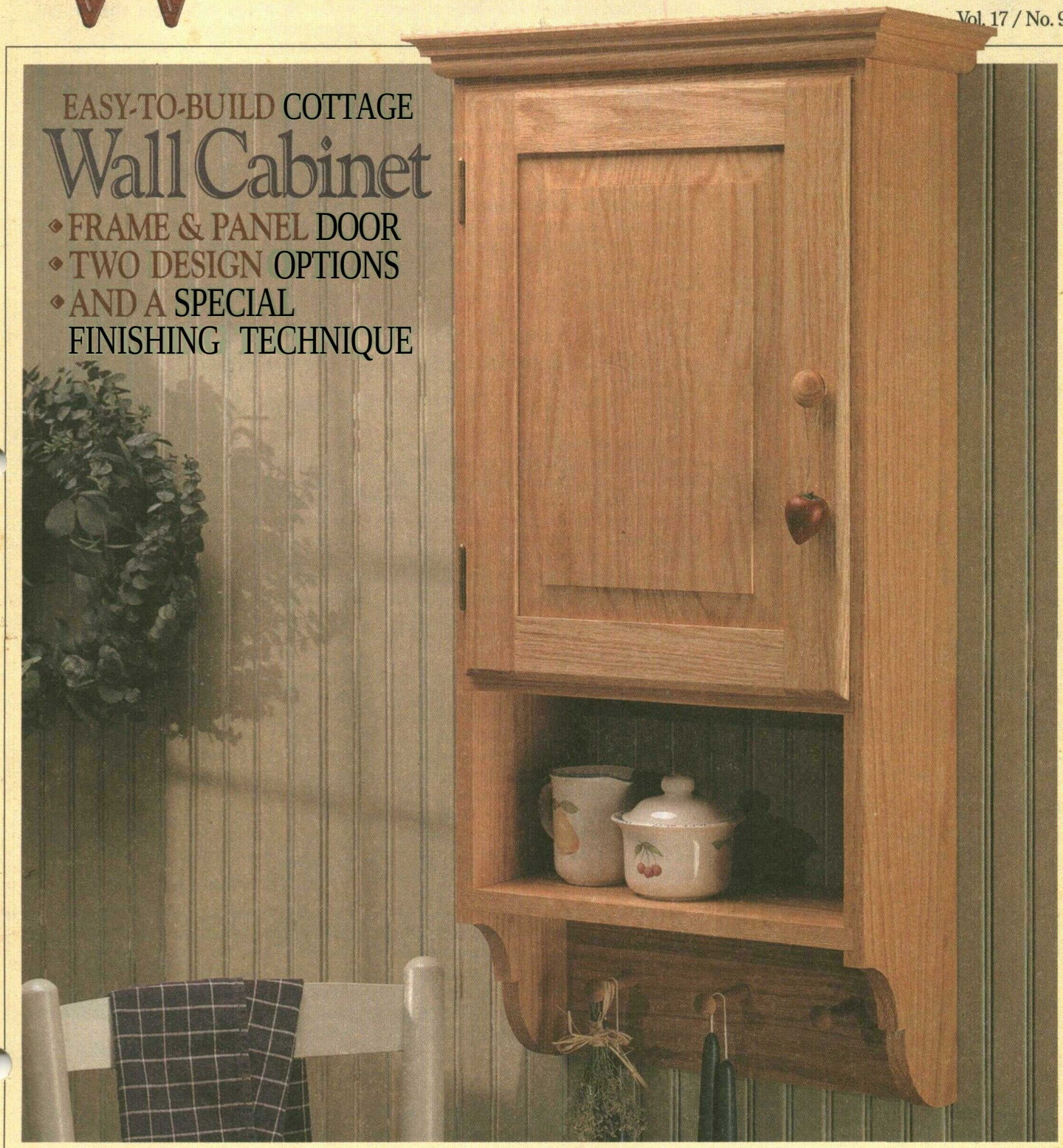

EASY-TO-BUILD COTTAGE
Wall Cabinet

- FRAME & PANEL DOOR
- TWO DESIGN OPTIONS
- AND A SPECIAL FINISHING TECHNIQUE

No. 99 June, 1995

Woodsmith®

Editor Donald B. Peschke
Executive Editor Douglas L. Hicks
Managing Editor Terry J. Strohman
Assistant Editors Jon Garbison, Mark A. Williams

Creative Director Ted Kralicek
Senior Illustrators David Kreyling, Cinda Shambaugh, Dirk Ver Steeg
Illustrator Erich Lage
Photographer Crayola England
Electronic Graphics Chris Glowacki
Design Director Ken Munkel
Senior Designer Kent Welsh
Shop Manager Steve Curtis
Shop Asst./Facilities Steve Johnson

CIRCULATION

New Business Manager: Sandy Baum • *Renewal Manager:* Paige Rogers • *Direct Mail Manager:* Troy J. Dowell • *Direct Mail Assistant:* Julie Greenlee • *Newsstand Sales:* Kent A. Buckton • *Circulation Analyst:* Shane Francis

PUBLISHING SERVICES

Mgr: Gordon Gaippe • *Graph. Artist:* Cheryl L. Cynor

CORPORATE SERVICES

Planning Director: Jon Macarthy • *Controller:* Robin Hutchinson • *Account.:* Laura Thomas • *Bookkeeping:* Holly Lucas • *Production Mgr.:* Carol Quijano • *Info. Serv. Mgr.:* Joyce Moore • *Elec. Pub. Coord.:* Douglas M. Lidster • *Network Adm.:* Nick Thielen • *Admin. Assistants:* Cheryl A Scott, Julia Fish • *Receptionist:* Jeanne Johnson • *Build. Maint.:* Ken Griffith

WOODSMITH MAIL ORDER

Art Dir.: Cindy Jackson • *Catalog Prod. Mgr.:* Bob Baker • *Inv. Control/Prod. Mgr.:* Mark Mattiussi • *Proj. Supplies:* Linda Jones • *Tech. Supp:* Dave Stone • *System Operator:* Tammy Aldini

CUSTOMER SERVICE

Manager: Jennie Enos • *Team Leader:* Karla Cronin • *Customer Service Reps.:* Jennifer Murphy, Joy Krause, Sara Kono, Anna Cox, Lonnie Algreen, Adam Best, Kristi Andrews

SHIPPING DEPARTMENT

Supr: Nancy Johnson • *Fulfillment:* Gloria Sheehan, Chuck Carlson, Sylvia Carey, Larry Prine

WOODSMITH STORE

Manager: Dave Larson • *Assistant Manager:* Paul Schneider • *Sales Staff:* Wendell Stone, Pat Lowery • *Office Manager:* Vicki Edwards

Woodsmith® (ISSN 0164-4114) is published bimonthly (Feb., Apr., June, Aug., Oct., Dec.) by Woodsmith Corp., 2200 Grand, Des Moines, IA 50312.
Woodsmith® is a registered trademark of Woodsmith Corp. Copyright© 1995 Woodsmith Corporation. All rights reserved.
Subscriptions: Single copy: $3.95. One year subscription (6 issues). $19.95. Two years (12 issues), $35.95. (Canada/Foreign add $5 per year, U.S. funds.)
Second Class Postage Paid at Des Moines, IA and at additional offices.
Postmaster: Send change of address to *Woodsmith,* Box 10718, Des Moines, IA 50350.
Subscription Questions? Call 1-800-333-5075, 8:00 am to 5:00 pm, Central Time, weekdays.
E-Mail. Prodigy: EDJE97A CompuServe: 75330,2301, Internet: 75330.2301@compuserve.com., America Online: Donpeschke.
Printed in U.S.A

EDITOR'S COLUMN

Sawdust

Bigger isn't always better. And this goes for woodworking projects too. Don't get me wrong — I like large projects. But sometimes small projects can be just as satisfying to build as large ones. After all, they don't take much time, mistakes aren't costly, and it gives you a chance to try a variety of woodworking techniques.

COTTAGE WALL CABINET. A good example of this is the cottage wall cabinet shown on page 6. It's not a large or complicated project to build. But it does provide an opportunity to try a number of woodworking techniques.

Dadoes and rabbets are used to hold the cabinet together. There's a raised panel door with stub tenon and groove joinery. And the cabinet is topped off with built-up moldings that can be made with a router.

The projects in this issue prove that "good things come in small packages."

There's even a couple of design options to choose from. The cabinet can be built with a towel bar or Shaker pegs. Whichever you prefer.

We're also showing a couple of options for finishing this project. For the cabinet pictured on the cover, I used a traditional wipe-on oil finish. But for the one shown on page 6, I tried something different. What I wanted was the look of a painted cabinet — but I didn't want to hide the grain of the wood.

The solution was to apply several coats of white stain. Then to bring out the pattern of the grain, we rubbed on a light coat of dark stain. The end result is a project that looks like a painted "antique."

SMALL BOX. The small box shown on page 26 is another small project that gives you a chance to use almost every tool in your shop. Before you're done, you'll use the band saw, table saw, drill press, hand-held router, and the router table. It's a lot of woodworking for a "small" project.

TOWER BOOKCASE. Another small project that has gone over big here is the tower bookcase on page 18. Small project? Okay, it's over six feet tall, but it takes up less than two square feet of floor space. That's quite a bit of storage for such a small space. But don't let the height of this project intimidate you. It's not a difficult to build. Basically, it's just a narrow, plywood box with a few adjustable shelves and some simple molding.

DESK **CLOCK.** But my favorite project in this issue is also the smallest: the desk clock on page 14. It requires the smallest amount of material and the least amount of time to build. But what I really like best is that it has a nifty little solution to a *big* problem. Let me explain.

Most small clock movements require a *big* bit to drill a rather large hole. (In my case, 2⅜" diameter.) But who wants to spend a lot of money for a drill bit that gets used so seldom? The solution is simple. Instead of drilling a hole in a block of wood, the body of this clock was built in sections. This allowed us to cut the opening with a band saw *before* we assembled the different parts.

FINISHING FIXES. I know you're probably getting tired of all this "small talk," but thinking small also applies to the finishing article on page 22. With most finishing articles, I'm in the shop completing a new project. This time, I decided to try something different: repairing a damaged finish.

I know what you're thinking — refinishing a project is a big job. And I couldn't agree more. But you don't need to refinish a project just because it has a small scratch or dent. There are some simple techniques you can use to repair the damage. These techniques won't take a great deal of time, money, or skill but will make the scratches practically invisible.

NEW FACES. Recently, we've had a couple of new people join us. Holly Lucas is our new bookkeeper. And Paige Rogers has joined our circulation department.

OPEN HOUSE INVITATION

I mentioned last issue that we've finished remodeling our offices, and we're getting ready for issue No. 100. To celebrate both events, we thought we'd have a little open house. It'll take place on Sunday, July 23, from 1-5 PM. So if you're in the neighborhood, please stop in and say "hi."

Don

Contents

FEATURES

Cottage Wall Cabinet 6

This is a project with lots of options. It can be built with a towel bar or Shaker pegs. And depending on the type of finish you choose, it'll look great in a bathroom or kitchen.

Stub Tenon & Groove 12

Use this joint whenever you need a quick frame. Our step-by-step instructions will show you how to cut both the stub tenon and the groove easily and accurately.

Desk Clock 14

An inexpensive clock movement and a few scraps of wood are all you need to build this weekend project.

Tower Bookcase 18

If you're short on storage space, this tall bookcase may be the answer. There's enough room to hold a small library, but it takes up less than two square feet of floor space.

Finishing Fixes 22

If there's a scratch or dent in your furniture, you don't have to completely refinish the piece. There are some simple techniques for quickly repairing minor finish damage.

•Small Box 26

The appearance of this box isn't the only thing that makes it unique. The construction is unconventional as well. The body is built from a single block. Then it's "scooped out" like a pumpkin — but you don't need carving tools.

DEPARTMENTS

Tips & Techniques 4

Shop Notes 16

Reader's Jig 30

Sources 31

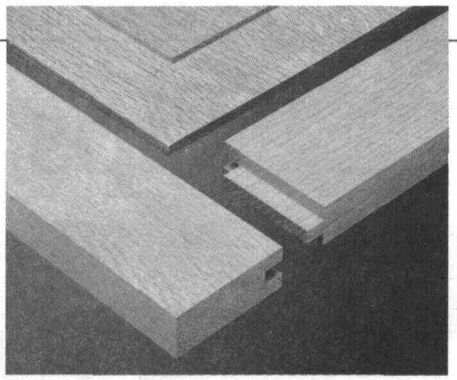

Stub Tenon & Groove *page 12*

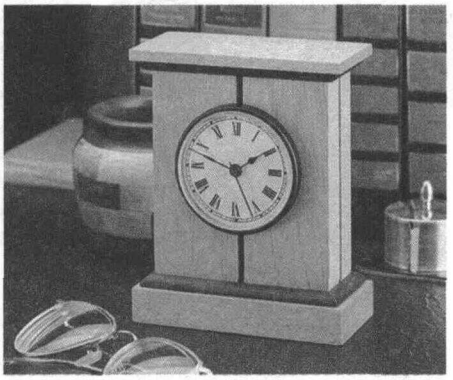

Desk Clock *page14*

Finishing Fixes *page 22*

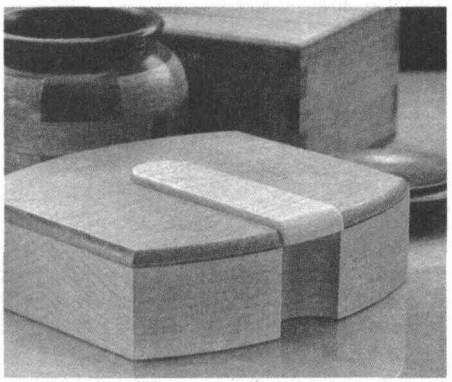

Small Box *page 26*

Tips & Techniques

FINISHING SUPPORTS

•When applying a finish to a project, it can be difficult getting it on every surface. Especially the areas next to the workbench. So I lift my projects up off the workbench with small, triangle-shaped blocks.

The shape of the blocks keeps them stable under heavy loads. And since only a small point on each block actually touches the wood, I can apply finish to the entire project.

The blocks are simple to make. Just tilt your blade to 30° and cut as many as you need. Note: Using a hardwood (like maple) works best. The sharp points will last longer and won't get crushed under the weight of a heavy project.

Al Hannas
Summit, New Jersey

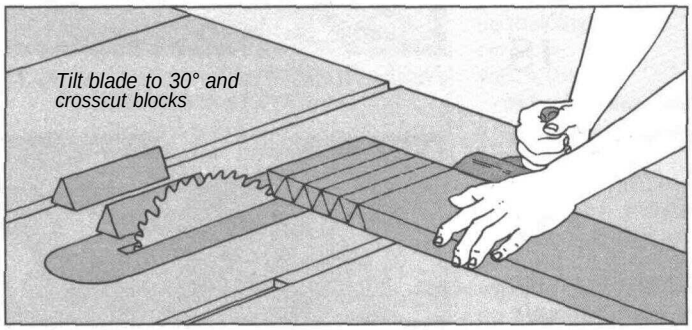

SCREW REMOVAL

• Nothing is more frustrating and time consuming than trying to remove a broken woodscrew when assembling a project. If you're lucky, there's enough of the screw left so you can grab it with pliers. But when it breaks off below the surface, it's a challenge to remove it without damaging the wood around it.

Rather than drilling out the wood around the screw, I'll drill out the screw itself. All it takes is a block of hardwood and a drill bit a little smaller than the diameter of the screw.

To remove the broken screw, I start by drilling a hole (smaller than the diameter of the screw) through a block of hardwood (like maple). I'll use the drill press to make sure the hole is perfectly straight. Then position the block over the broken screw and clamp it in place.

When drilling the hole, it works best to keep your drill pressure fairly light. You don't want the bit to wander off the top of the screw and into the wood.

John Dykstra
Calgary, Alberta

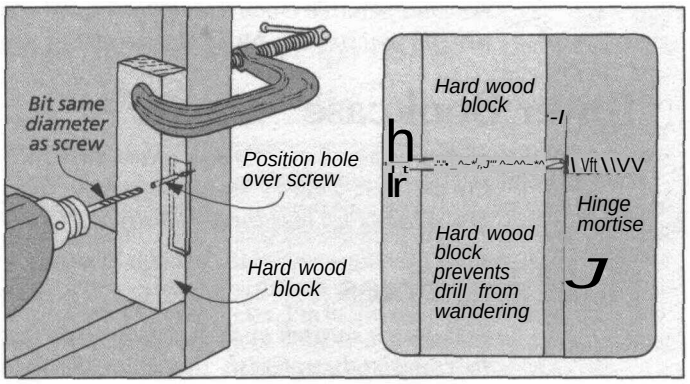

CARPET TAPE

• I like to use carpet tape when working on a project. But it can be difficult trying to remove the paper backing once the tape is stuck in place. So I use a little trick that works every time.

First, cut off a small piece of tape and stick it to one corner (sticky part to sticky part), see Fig. 1. Then cut a piece like normal and stick it in place. Now lift up on the small piece on the end and fold it back to form a small crease (like opening a pop-top on a pop can), see Fig. 2.

This crease will separate the sticky part of the tape from the paper backing so the backing is easy to grab, see Fig. 3. Then pull the small piece off the end of the tape and remove the paper backing, see Fig. 4.

George Johnson
Foster City, California

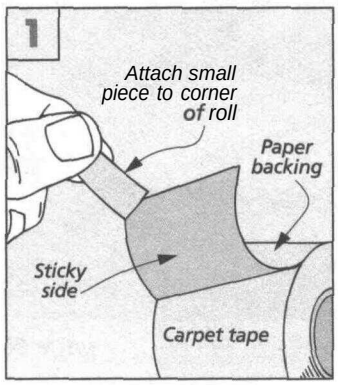

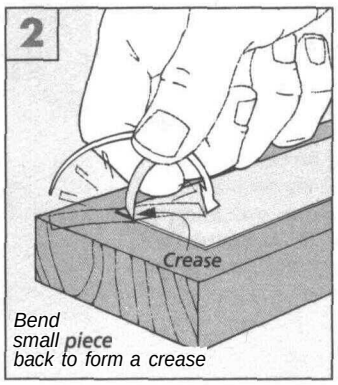

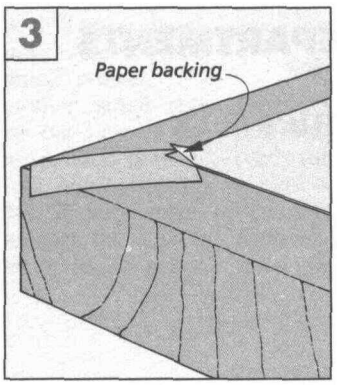

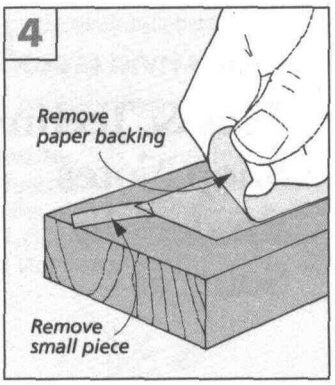

WOOD PADS

■ The legs on outdoor furniture always present a problem. The end grain on the ends of the legs sucks up moisture like water through a drinking straw. To prevent this, I add wooden pads to the ends of the legs.

These pads are nothing more than blocks of wood the same size as the legs. They're permantly attached with glue and screws. Shop Note: Both construction adhesive or exterior glue can be used.

But the trick here is installing the pads so the face grain (not end grain) sits on the wet surface. Face grain doesn't drawup the moisture so the pads "block it" from the legs.

Stanley Walsh
Baton Rouge, Louisianna

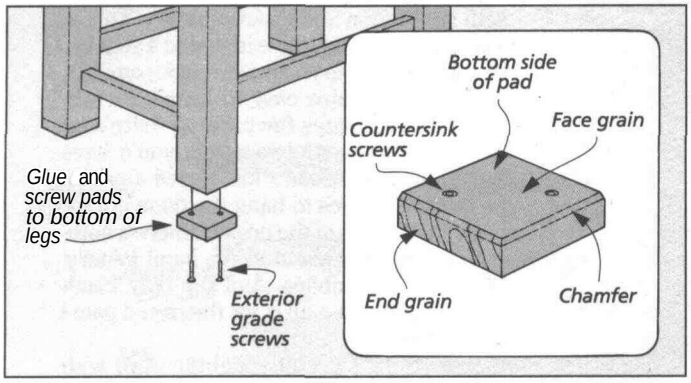

BEESWAX

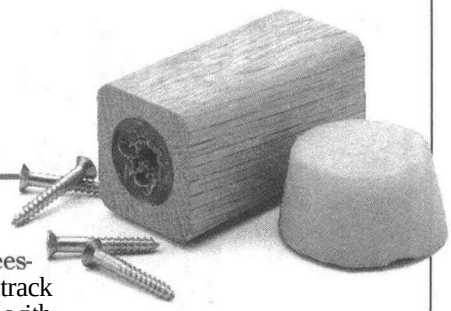

• I like to coat woodscrews with beeswax to lubricate them. But my beeswax cake is hard to keep track of. Plus it's usually covered with chips and dirt.

To keep my wax handy and clean, I made a wooden dispenser. It's a block of wood with a hole drilled in it. Just fill the hole with melted wax, see Fig. 1.

Best of all, when you use up the wax towards the top, simply cut off part of the block to expose fresh wax, see Fig. 2.

Jerry Minnick
Truro, Iowa

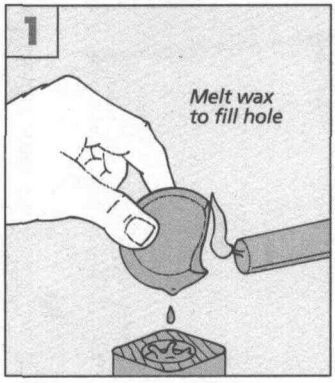

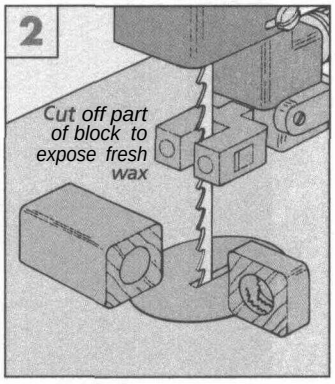

BRAD HOLDER

•A magnetic paper clip dispenser makes a great place to store small brads. Just give it a light shake, and the brads stick to the magnetic ring around the top. Then it's easy to grab one when you need it.

Ron Weichel
Santa Rosa, California

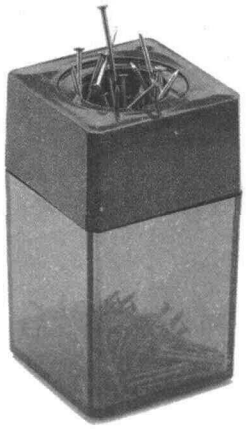

MAGNETIC PUSH STICK

• Using a push stick is always a good idea. Especially when you're cutting narrow pieces. But if you're like me, the push stick ends up on the workbench just when you need it most.

To keep mine handy, I came up with the idea of making it magnetic. That way I can stick it on the rip fence within easy reach whenever I need it. Note: Make a couple extra to stick to the jointer or band saw.

It's not difficult making push sticks magnetic. First, cut out the push stick to the size and shape you need. Then cut off a piece of magnetic tape (available at most hardware stores) and attach it to one side of the stick. The magnetic tape is easily cut with scissors and comes with a self adhesive tape on one side so it's ready to use.

George Scharg
Deland, Florida

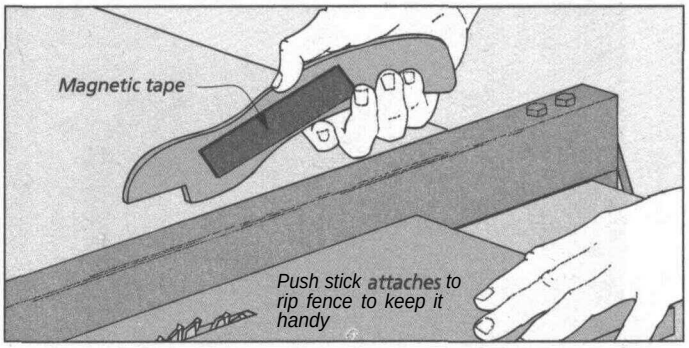

SUBMIT YOUR TIPS

If you would like to share an *original* shop-tested tip, send it to *Woodsmith*, Tips and Techniques, 2200 Grand Avenue, Des Moines, Iowa 50312. Or if it's easier for you, FAX it to us at: 515–282–6741. Or use our E-Mail address: 75330, 2301@compuserve.com.

If we publish it, we will send you (upon publication) $30 to $150, depending on the published length of the tip. Please include a brief explanation and sketch (or photo). And don't worry about sending in a rough copy. We'll rewrite the tip and redraw the art if necessary. Also, *please* include a daytime phone number.

Cottage Wall Cabinet

" From building a raised panel door to installing built-up molding, this storage project features a number of woodworking techniques. There's even a special finishing process you may want to try.

The raised panel door on this cottage wall cabinet is easily the biggest challenge you'll run into when building it. But like everything else on this project, the door has been designed to be as "builder-friendly" as possible.

For one thing, the door is held together with stub tenon and groove joinery. This is a simple joint, and we've included a step-by-step article to help you make it (see page 12).

The door is also easy to install. Its rabbeted lip overhangs the case, so there's no fussing with the tiny gaps that you'd have around an inset door. Plus, I used a pair of no-mortise hinges to hang the door.

As for the rest of the project, there's nothing complicated about it. No hand joinery. No tricky assemblies. And the only blank you'll need to glue up is for the raised panel in the door.

Everything's pretty staightforward with this cabinet. Except for some routed molding and the scallops on the sides, almost all the work is done on the table saw.

OPTIONS. Of course it doesn't matter how easy a project is if it doesn't fit in your house. Here's where this cabinet shows its versatility. It can fit in almost any room: kitchen, bathroom, hallway, utility room, and even an informal dining room.

As with any project, the type of wood you use will make a big difference on the final appearance of the project. I used red oak, which is an informal wood (like pine). But you could "dress up" the cabinet by building it out of cherry or walnut.

FINISH OPTIONS. As for the finish, there are a lot of options here, too. You can simply wipe on a few coats of an oil finish to the cabinet, like the one shown on the cover. Or you can first "paint" it with a couple coats of stain. Then highlight the pores with an additional coat of a darker stain, as shown at left. (For more on this, see box on page 11.)

DESIGN OPTIONS. And there's even a design option. You don't have to include the towel bar, shown here. Instead you can substitute a row of Shaker pegs, see the photo on the next page.

Construction Details

Overall Dimensions: 37" x 18¾"x 8⅜"
Wood: Red Oak - 14 bd. ft.

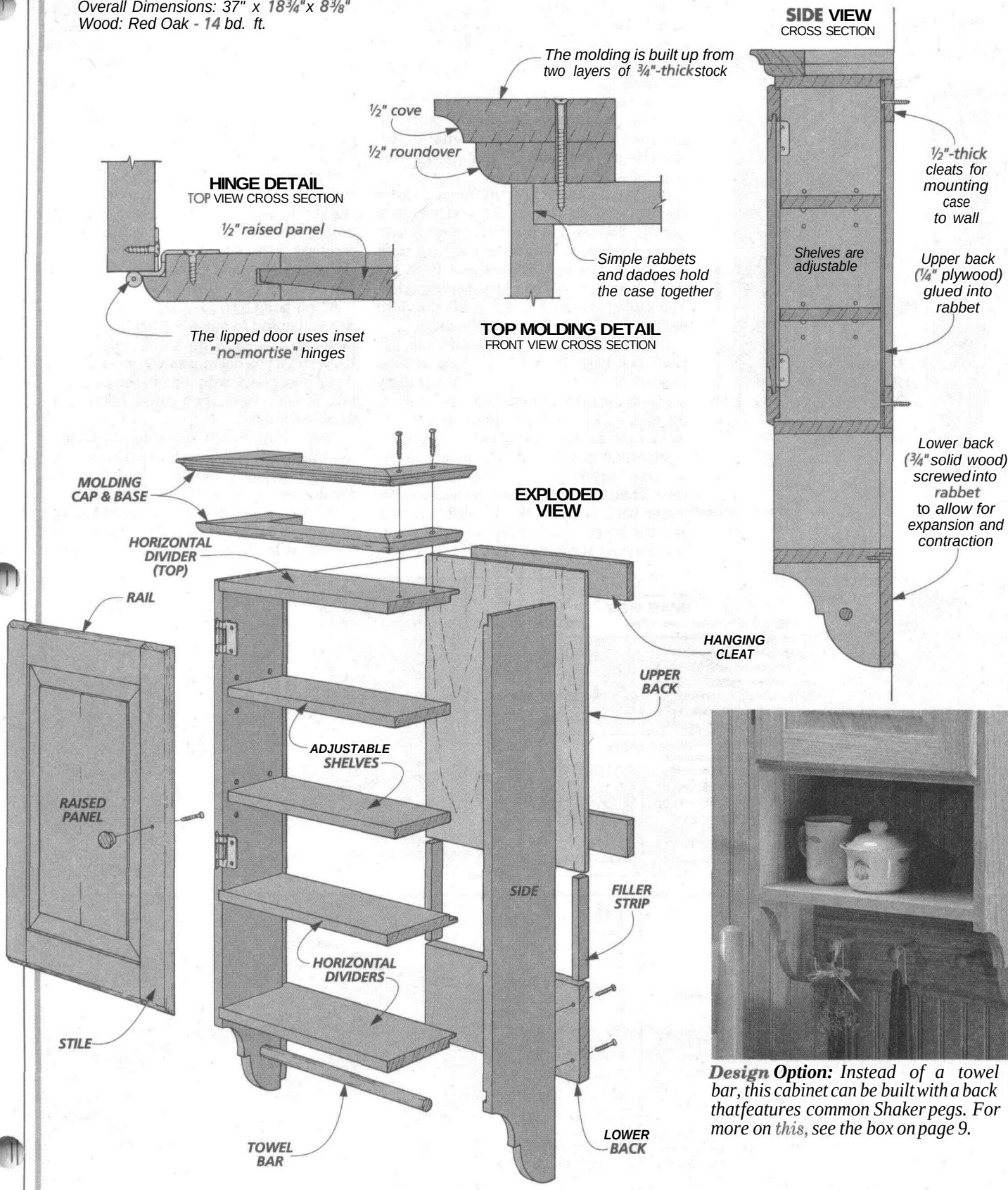

Design Option: *Instead of a towel bar, this cabinet can be built with a back that features common Shaker pegs. For more on this, see the box on page 9.*

CASE, BACKS, & MOLDING

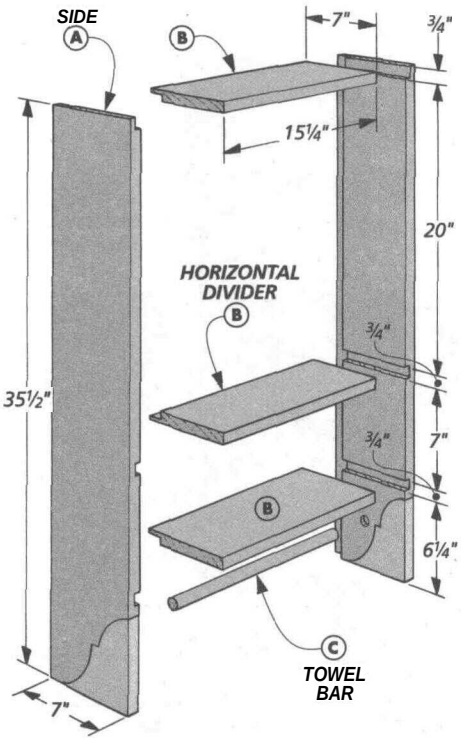

I kept the case of this cottage wall cabinet pretty simple. There are really just a few parts—two side pieces that sandwich three horizontal dividers, see the drawing at left. And the joinery is simple too—just dadoes and rabbets.

SIDES & HORIZONTAL DIVIDERS. To build the case, I started by cutting the pieces to size. The sides (A) and horizontal dividers (B) are cut from ¾"-thick stock, see drawing at left.

DADOES & RABBET FOR DIVIDERS. After everything is cut to size, the next step is to cut two dadoes and a rabbet in each side piece, see Fig. 1. The dadoes are cut to fit the two horizontal dividers that form the fixed shelves in the case, see drawing at left. The rabbet cut on the end holds the third divider that forms the top of the case.

Both the dadoes and rabbet are cut ⅜"-deep, see Figs. 1a and b. To help prevent chipout, it's a good idea to use an auxiliary fence on the miter gauge. And when cutting the dadoes, I used the rip fence as a stop to make sure the dadoes align with each other.

RABBET FOR BACKS. Next, it's time to create some rabbets to hold the backs of the case. This case actually has two backs—the upper back is cut from ¼"-thick plywood, and the lower back is ¾"-thick solid wood, see drawing at right on page 9.

Instead of making two separate rabbets for the different-sized backs, I cut a single, ¾"-deep rabbet for both, using a dado blade in the table saw. To do this, first attach an auxiliary fence to the rip fence and set it to cut a ¾"-wide rabbet, see Fig. 2a. Then raise the blade ½" above the table and cut the rabbets along the back edges of both side pieces and all three horizontal dividers, see Fig. 2 and drawing at left.

SCALLOPS ON SIDES. Now the joinery is complete, and the scallops on the bottom ends of the sides can be cut, see Fig. 3. This procedure isn't difficult. All you need is a compass. First, lay out the two arcs on each side piece. Next, cut the scallops with a band saw or sabre saw. Then sand them smooth.

At this point, you need to make a decision. Are you going to include a towel bar? If so, then you'll need to do a little more work. However, if you decide instead to use the optional lower back with the Shaker pegs (see box on next page), then you're ready to assemble the case.

TOWEL **BAR.** If you are going to include the towel bar, you'll need to drill a hole on each *inside* face of the sides, see Fig. 3. Like the dadoes, these holes are ⅜" deep.

With the holes drilled, the towel bar (C) can be cut to length from a ¾"-dia. dowel.

ASSEMBLY. Now the case can be assem-

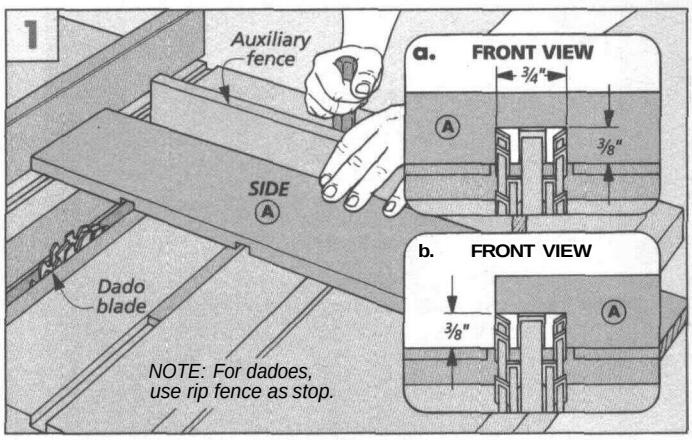

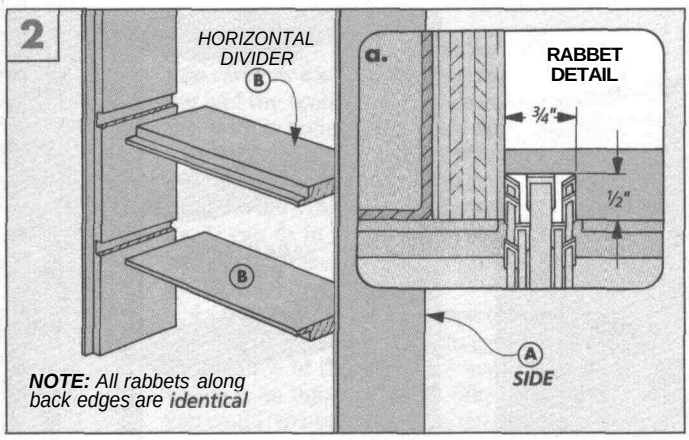

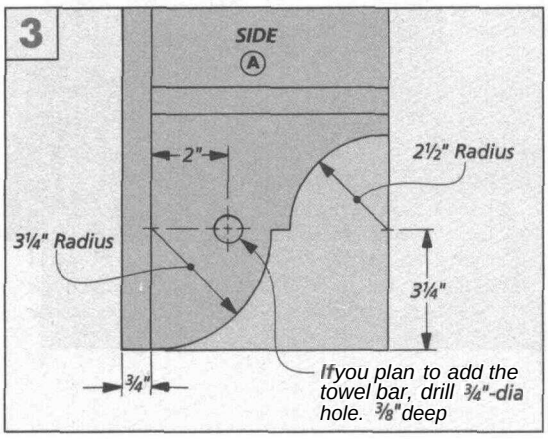

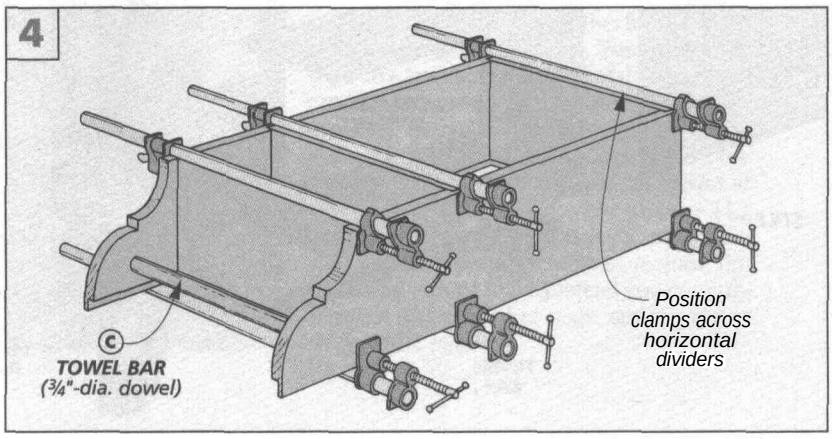

bled, see Fig. 4. The only thing to watch out for is how you orient the rabbets on the horizontal dividers, see drawing at left on page 8. They should be positioned to hold the backs. The rabbets on the upper two dividers should face each other. The rabbet on the lower divider should face down.

UPPER BACK. When the glue is dry, the next step is to add the backs, see Fig. 5 and drawing at right. First, the upper back (D) is cut to size from ¼"-thick plywood. Then it's simply glued in place.

Because this back is only ¼" thick, it won't sit flush with the back of the case. It's recessed ½". I utilized this space for hanging the case. Cut two ½"-thick hanging cleats (E) to fit between the sides, see Fig. 5. Then glue them to the upper back.

LOWER BACK. For the lower back, the tenons on the ends of the optional Shaker pegs require ⅝"-deep holes, see box at right. I decided against using plywood here because the bottom edge would be exposed. Instead, I built the lower back (F) from ¾"-thick oak, see Fig. 5. Because it's solid wood, you need to allow for wood movement with changes in humidity. So don't glue the lower back — just screw it in place.

FILLER STRIPS. The upper and lower backs only fill the rabbets at the top and bottom of the case. Part of each rabbet is still exposed above the lower shelf. To fill these rabbets, I cut two small filler strips (G) to size and glued them in place, see Fig. 5a.

MOLDING. The last step is to add decorative molding to the top of the case, see drawing at right. This molding is built up from two ¾"-thick strips.

Begin by cutting *two* blanks for each strip. They're all the same length (20"), but the molding base (H) is 2½" wide, while the molding cap (I) is 3¼", see Fig. 6.

Next rout a profile along one edge of each blank, see Fig. 6. The base molding has a ½" roundover. The cap has a ½" cove. After the profiles are routed, the blanks can be glued together, see Fig. 6.

When the glue is dry, the molding can be attached. I started with the front piece of molding, see Fig. 7. The *back* edge of this piece is 1⅞" from the front of the case, see Fig. 7a. (I drew a line across the top of the case to position the piece.)

Miter the front piece to length and center it side-to-side. (Drawing centerlines on the molding and the case helps with alignment.) Then I clamped the molding, drilled shank and pilot holes, and screwed it in place.

With the front molding in place, the side pieces are easy to install. Just miter one end and cut them flush with the back. Then screw them to the top of the case.

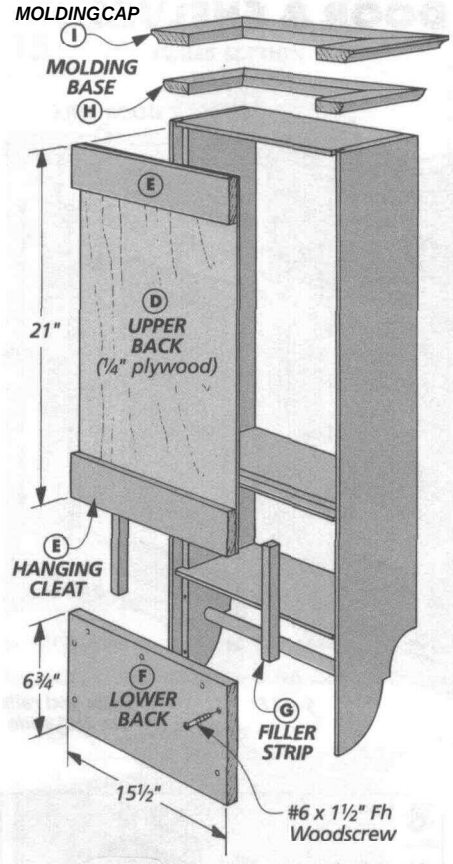

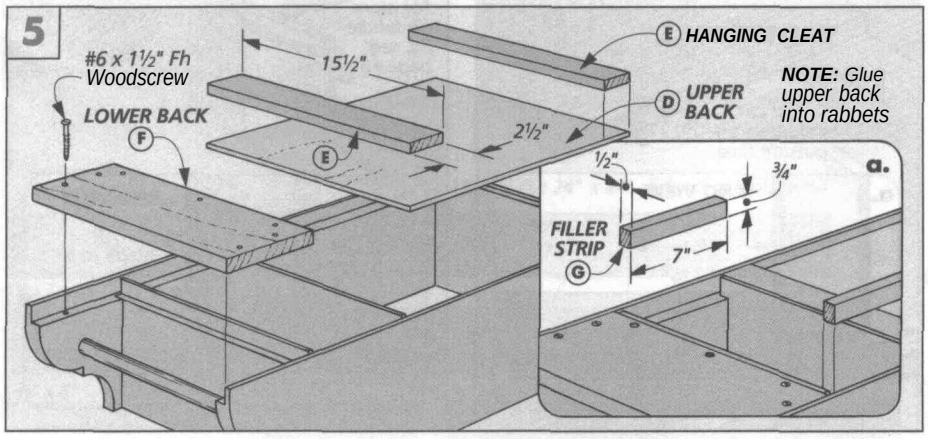

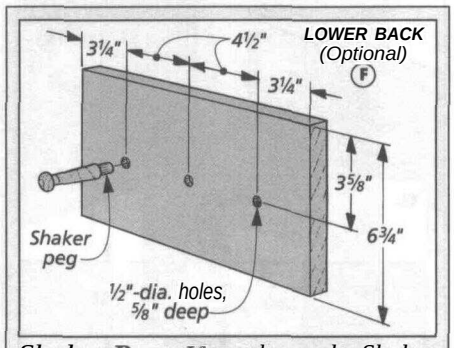

Shaker Pegs. If you choose the Shaker pegs instead of the bar, drill holes in lower back (F) and glue them in place.

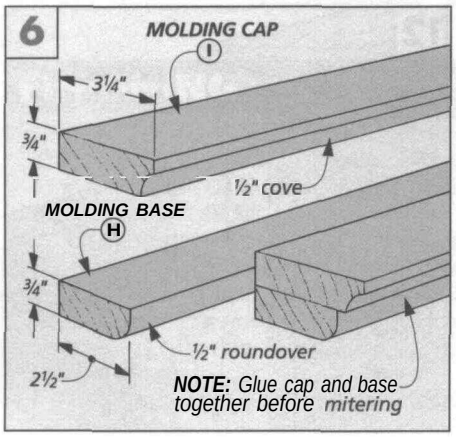

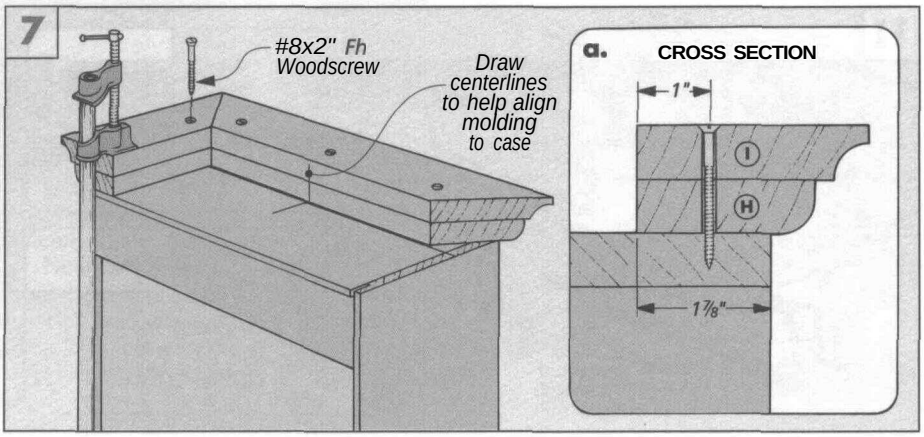

DOOR & SHELVES

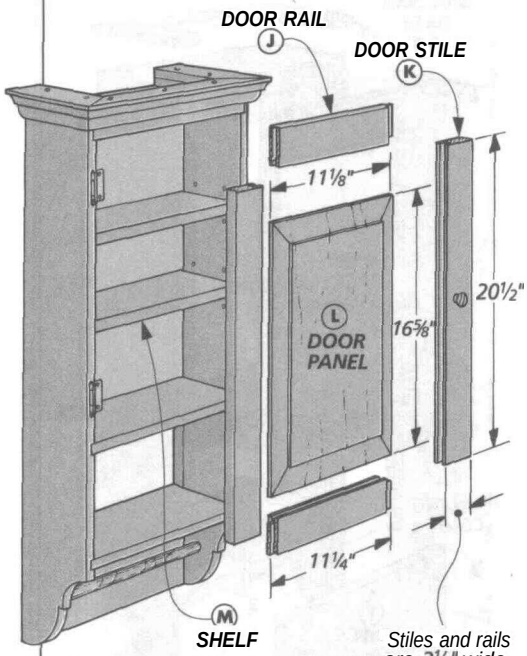

The door on this cabinet is a ½"-thick raised panel with a ¾"-thick frame. To make the door easy to build, I used stub tenon and groove joinery to hold it together.

To make the door as easy as possible to install, I decided to build a lipped door. It's ½" larger than the opening, and the lip on the inside edge overlaps the case.

RAILS & STILES. Begin the door by building the frame, see Fig. 8 and drawing at left. These pieces are all ¾" thick and 2¼" wide. To find the length of the **rails (J),** measure the height of the opening and add ½". (Mine were 20½" long.) To find the length of the **stiles (K),** add ½" to the width of the opening, subtract the width of both rails, and add ¾" for the tenons on the ends. (My rails ended up 11¼" long.)

After the rails and stiles have been cut to size, the next step is to cut the stub tenons and grooves, see Fig. 8. (For more on cutting this joint, see the article on page 12.)

RAISED PANEL. With the rails and stiles complete, work can begin on the raised panel. First glue up a ½"-thick blank for the **raised panel** (L). Then cut the panel to finished size. To determine these dimensions, dry assemble the door frame and measure the opening (including the grooves). Then subtract ⅛" to allow for wood movement.

To cut the raised profile on the panel, the first thing I did was establish the square shoulders. This is done by scoring the outside face of the panel with the saw blade, see Fig. 9. Simply raise the blade ⅛" above the table and set the rip fence 1½" from the far edge of the blade, see Fig. 9a. Then make a scoring pass along the sides and ends.

To complete the profile, I used the table saw again, this time standing the panel on edge, see Fig. 10. But to do this safely, the panel needs some support. So I built a tall jig that slides along the rip fence. (For more on this jig, see page 16.)

You want the panel to fit the frame without being too loose or too tight. With 3/16"-thick edges, the panel fits the ¼"-wide groove well. So set the fence so the jig is 3/16" from the blade, see Fig. 10a. Tilt the blade 6° and raise it to the shoulder on the panel. Then cut the beveled profile and sand it smooth.

DOOR ASSEMBLY. With the panel complete, the door can be glued and clamped together. But to allow the panel to float, don't

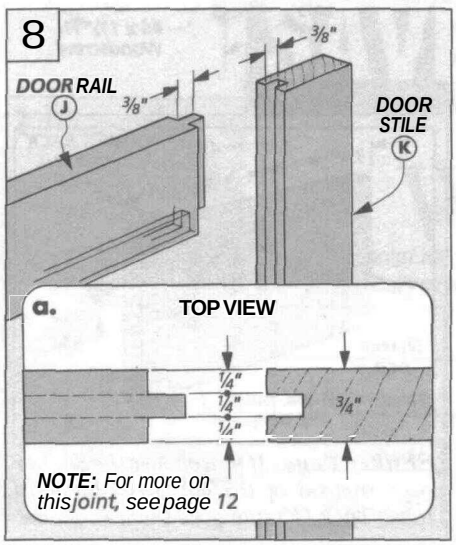

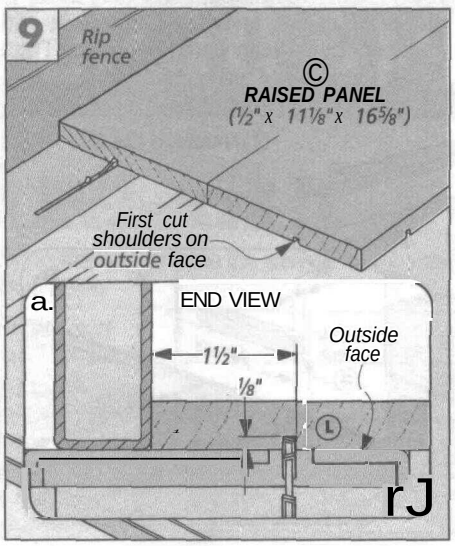

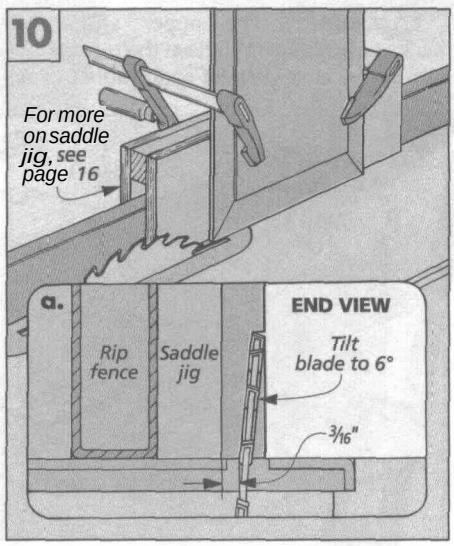

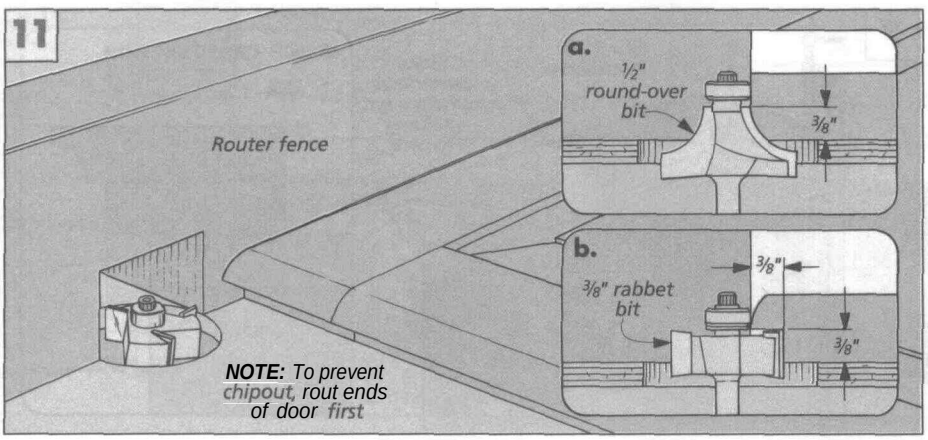

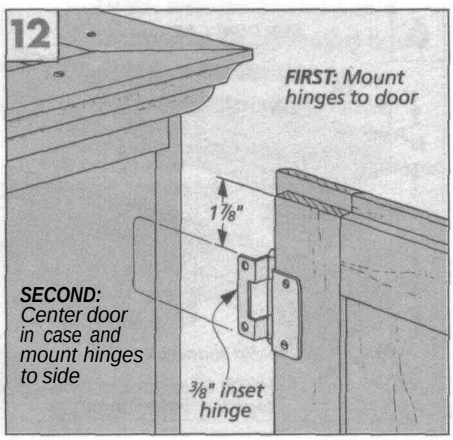

glue in the panel. You want it to expand and contract with changes in humidity.

Once the glue dries, round over the *outside* face of the door, see Fig. 11a. (I used a ½"round-over bit in the router table.) Then rout the lip on the *inside* face of the door, using a ⅜" rabbet bit, see Fig. 11b.

MOUNT DOOR. The next step is to mount the door on the case with a ⅜" inset hinge, see Fig. 12. The one I used was a no-mortise hinge. (For sources, see page 31.) This type of hinge is especially easy to install. You don't need to cut any mortises to mount it. It's simply screwed to the back of the door stile and the inside edge of the case.

All that's left for the door now is to add a knob and a magnetic catch, see Fig. 13.

To complete the cabinet, two adjustable shelves are added, see Fig. 14. Measure the inside of the case and cut the **shelves** (M) to size — making sure there's 1/16" clearance to allow the door to shut completely.

Finally to hold the shelves, I drilled holes inside the case for shelf supports, using a shop-built template, see Fig. 15. ❑

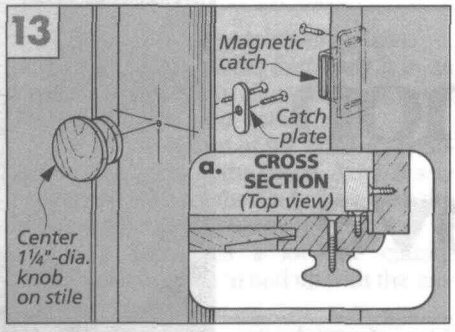

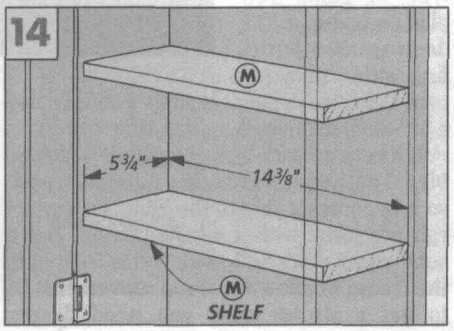

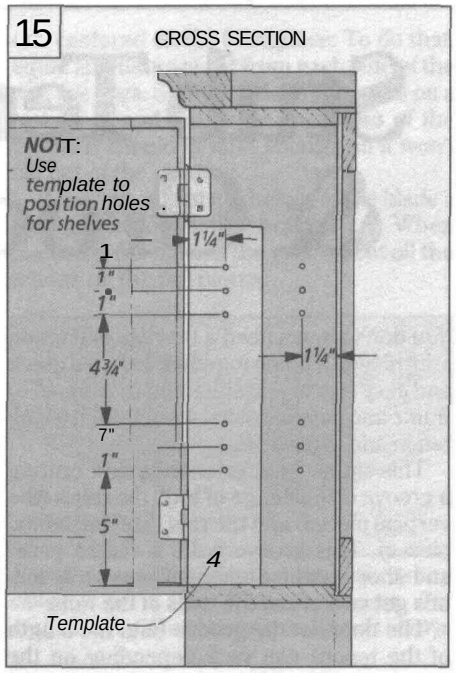

MATERIALS & SUPPLIES

A	Sides (2)	¾ x 7 - 35½
B	Horizontal Dividers (3)	¾ x 7 - 15¼
C	Towel Bar (1)*	¾ - 15¼ dowel
D	Upper Back (1)	¼ ply. - 15½ x 21
E	Hanging Cleats (2)	½ x 2½ - 15½
F	Lower Back (1)	¾ x 6¾ - 15½
G	Filler Strips (2)	½ x 3/4 - 7
H	Molding Base (2)	¾ x 2½ - 20 rgh.
I	Molding Cap (2)	¾ x 3¼ - 20 rgh.
J	Door Rails (2)	¾ x 2¼ - 11¼
K	Door Stiles (2)	¾ x 2¼ - 20½
L	Raised Panel (1)	½ x 11⅛ - 16⅝
M	Shelves (2)	¾ x 5¾ - 14⅜

- (1 pair) Antique Brass ⅜" Inset Hinges
- (7) #6 x 1½" Fh Woodscrews
- (7) #8 x 2" Fh Woodscrews
- (1) 1¼"-dia. Wood Knob
- (1) Magnetic Catch & Strike Plate
- (8) Spoon-style Shelf Support Pins

*Optional back requires (3) Shaker pegs

***ALSO NEED:** 24" x 24" - ¼" red oak plywood*

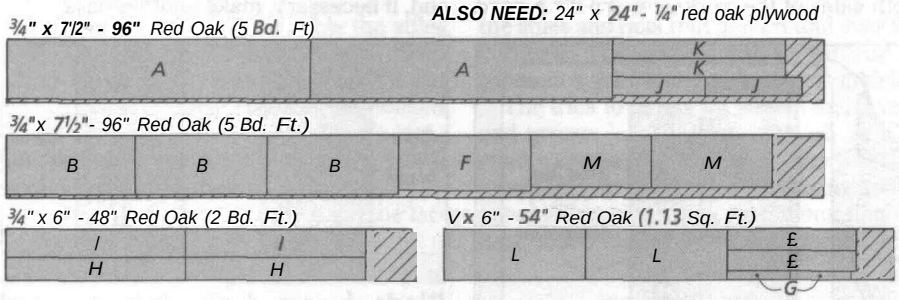

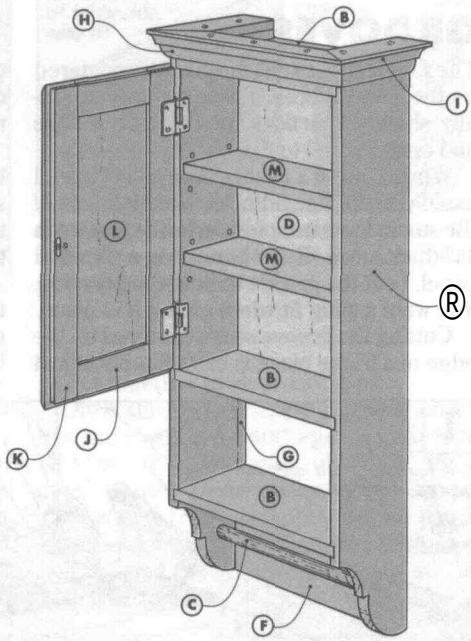

FINISHING

The simplest way to finish this cabinet is to wipe on a few coats of an oil finish, like the wall cabinet shown on the cover.

But I also wanted to try something a little different: to give the wall cabinet the look of a painted antique — without actually distressing it with nicks, dings, and scratches. To do this, I took advantage of oak's open pores.

First, I wiped on three coats of a white pigmented stain. (I used Minwax's Winter White Pastel stain.) This stain made the surface of the cabinet white without completely filling in the pores.

Next, I highlighted the pores of the wood by wiping on a coat of Minwax's Early American stain over the entire surface and immediately wiping it off again. This leaves the stain just in the pores, so the cabinet looks much older.

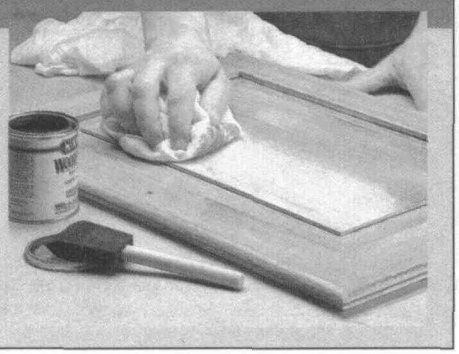

Stub Tenon & Groove

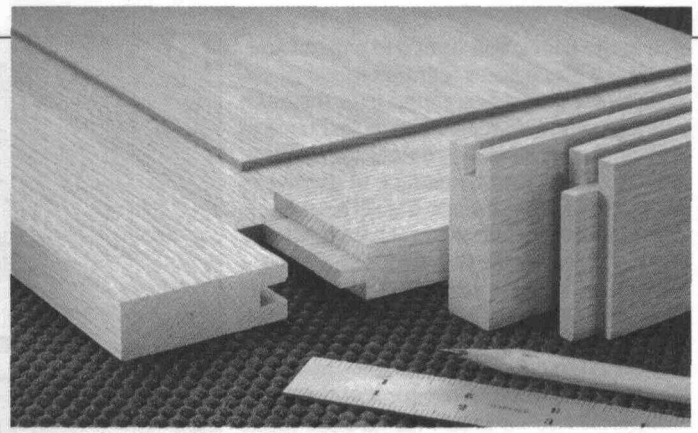

You don't always need a mortise and tenon joint to hold a frame together. In fact, a quick and easy way to join stiles and rails (used in frame and panel construction) is with a stub tenon and groove joint.

This simple joint is made by first cutting a groove on one edge of both the stiles (the vertical pieces) and the rails (the horizontal pieces). This groove holds a center panel and short, stubby tenons. These stub tenons get cut on just the ends of the rails.

The depth of the groove (and the length of the tenon) can vary depending on the type of panel you plan on using. A ¼"-deep groove works fine with a plywood panel. But if the panel is solid wood, I'll use a 3/8"-deep groove. Why the difference?

It has to do with how the frame is assembled. I glue a plywood panel into the groove so it becomes a part of the joint. That way I can get away with a smaller tenon. But a solid panel can't be glued. It has to float in the frame to allow for wood movement. So to get a strong joint, you need deeper grooves (and longer tenons) to increase the surface area for glue-up.

But there's more to consider than just the depth of the grooves. The grooves and tenons should also be centered on the thickness of the workpieces. And the workpieces should all be the same thickness. This way, there will only be two setups. One for the grooves. And another for the tenons.

GROOVES

The first step is to cut the grooves centered on the frame pieces. These grooves are really shallow mortises for the stub tenons and center panel to fit into.

When cutting a groove for a solid panel, I usually make its width V$ the thickness of the stock. For example: a V4"-wide groove in %"-thick stock. But when using a plywood panel, I cut the groove to hold the plywood. You want a snug fit when gluing it in place.

Cutting the groove so it's centered on the edge of a frame piece is easy. Simply adjust the rip fence on your table saw so the blade cuts close to the center, see Fig. 1. You don't need it to be perfect — here's why.

After making your first pass, just flip the board end-for-end and make a second cut, see Fig. 2. Now even if your blade isn't centered, the groove will be. You've removed the same amount of stock from both sides.

To adjust the width of the groove, move the rip fence over a little and make another cut. Remember you're cutting stock from both sides of the workpiece. So it's a good idea to make small adjustments and sneak up on the final width of the groove.

The trick to keeping the groove centered is making sure the workpiece stays tight against the rip fence. Here's where using a featherboard really helps, see Fig. 1.

Also, it's important to keep the workpiece pressed down against the table, see drawing below. If it lifts during a cut, there will be a step in the groove. This can cause problems during assembly. So I check each groove and, if necessary, make another pass.

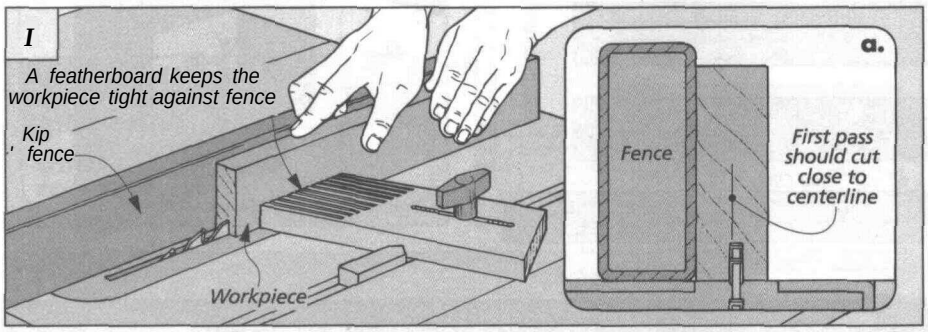

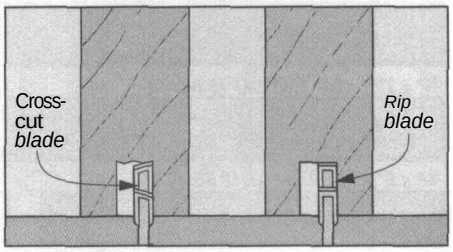

Blade choices. *A rip blade is a good choice for cutting grooves. The flat-topped teeth produce aflat-bottomed groove.*

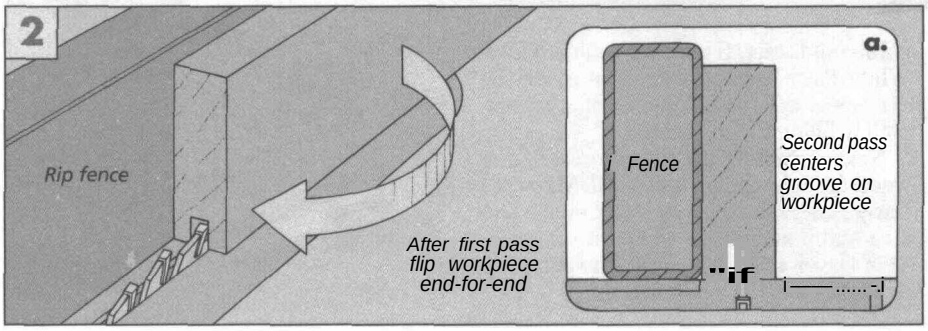

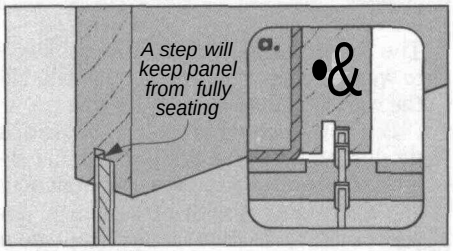

Downward pressure. *Hold the workpiece firmly against the table to prevent stepped cuts in the bottom of the groove.*

STUB TENONS

Once the grooves are complete, the second step is to cut tenons on the ends of the rails. Sometimes when there are only a few tenons to cut, I'll use a regular blade. But it takes several passes to remove the waste. And it leaves small ridges that make fitting the tenon difficult.

That's why I like using a dado blade. It may take a little time to install, but each side of the tenon is cut in a single pass. Plus, you don't have little ridges to clean up later.

To use a dado blade, first bury it in an auxiliary fence. Then adjust the fence to set the length of the tenon, see Fig. 3.

Now set the height of the blade to establish the thickness of the tenon. A quick way to get close is to set the blade flush with the bottom edge of the groove, see Fig. 4.

Cutting tenons is a lot like cutting grooves. The goal is to end up with the tenons centered on the workpiece. To do that, equal amounts are cut from each side of the rail, see Figs. 5 and 5a. Make your cuts on a test piece and check the thickness of the tenon. It should fit tight enough so it won't fall out of the groove.

If needed, adjust the height of the blade a little and make another practice cut. When the tenon fits tight in the groove, cut all the tenons on the rail pieces.

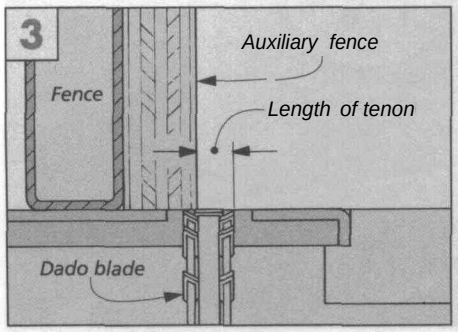

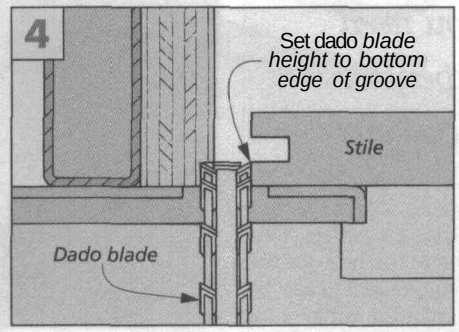

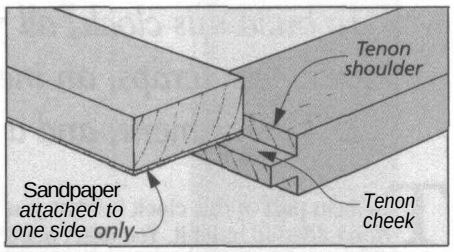

Sand the cheek. *Lightly sand the tenon cheek to get a snug fit in the groove. But stay clear of the shoulder to keep it sharp.*

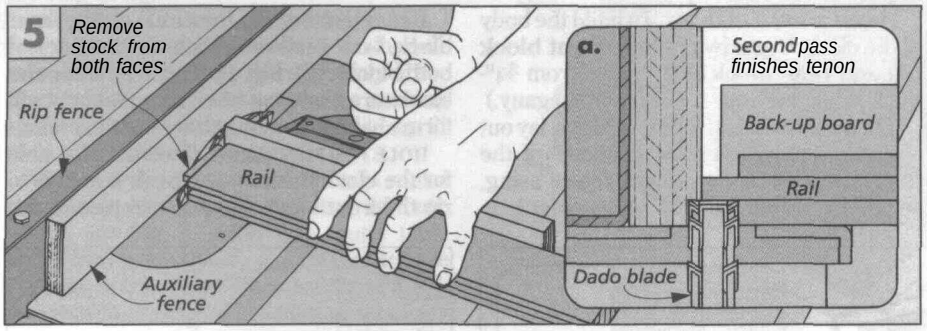

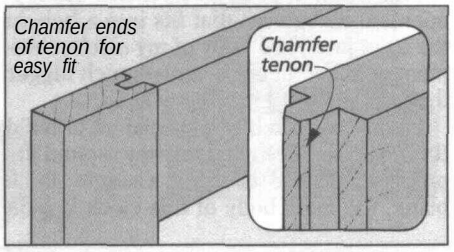

Chamfer tenon. *A small chamfer on the ends makes it easier to fit a tenon into a groove during assembly.*

ASSEMBLY

It's a good idea to dry assemble the stiles, rails, and center panel to make sure everything fits together tight. Even after using test pieces something could be overlooked. You don't want to find a tenon that's just a bit too long or a step in a groove after you've applied glue to all the pieces.

Now is also a good time to sand the face of the center panel and the inside edges of the stiles and rails (but don't round over the corners). These areas can be difficult to sand once the frame has been assembled.

The trick to gluing together a stub tenon and groove joint is using enough glue to make a strong joint, but not too much so that it runs all over the place. When using a solid panel, I'll apply a thin continuous film on each tenon cheek. Then lightly clamp the pieces together to close any gaps.

Once the clamps are tightened, check that the frame is flat and square. If the joint isn't flat, try loosening the clamps a little. If it isn't square, try repositioning the clamps.

Finally, if you're installing a solid panel, it's a good idea to install a brad in the top rail. It keeps the panel centered but still allows it to move in the frame. ❑

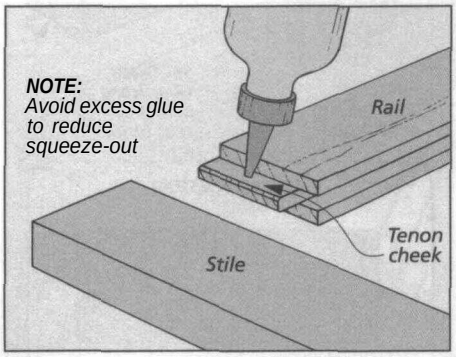

Gluing up. *A thin bead of glue spread evenly on the cheeks of the tenon is all that's needed when gluing up the joint.*

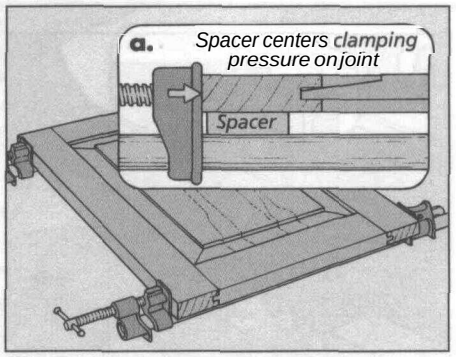

Clamping pressure. *Putting a spacer under the workpiece aligns the joint with the clamp jaw for even pressure.*

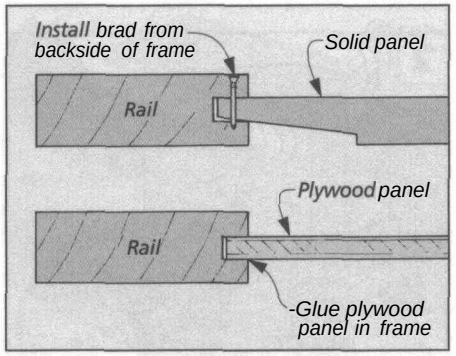

Securing a panel. *A solid panel floats in the frame. Use a brad to keep it centered. A plywood panel can be glued in place.*

Desk Clock

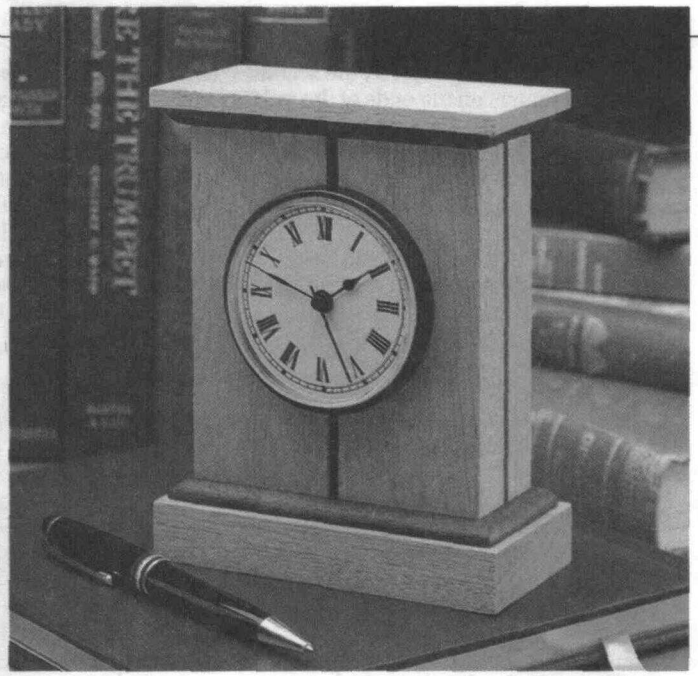

To build this clock, all you need are a few scraps, an inexpensive clock movement, and a weekend.

The best part of this clock is what you *don't* need to build it. You don't need a lot of wood. And you don't need a lot of time, either. But best of all, you don't need any special tools. Let me explain.

This clock uses an inexpensive battery-operated movement that fits into a hole in the front face. The body of my clock movement was 2⅜" in diameter — much bigger than any drill bit I had in my shop.

I didn't want to buy a special bit to build the clock, so I designed my way around the problem. Instead of using a single, thick blank, the main body of this clock is built from pieces that are glued together. This way, the hole for the movement can be cut with either a sabre saw or band saw.

FRONT & REAR BLOCKS. To build the body of the clock, begin by cutting a **front block (A)** and **rear block (B)** to size from ¾"-thick stock, see Fig. 1. (I used mahogany.)

Then on the face of the front block, lay out a circle that matches the diameter of the *body* of the clock movement you're using, see Fig. 1. (Mine was 2⅜" in diameter.)

Before cutting out the circle on the front block, I cut shallow rabbets on the sides of both blocks, see Fig. 1a. This way, when the blocks are glued together, these rabbets will form shadow lines that hide the glue joint.

HOLE FOR MOVEMENT. To create the hole for the clock movement, the first step is to rip the front block (A) into two pieces, see

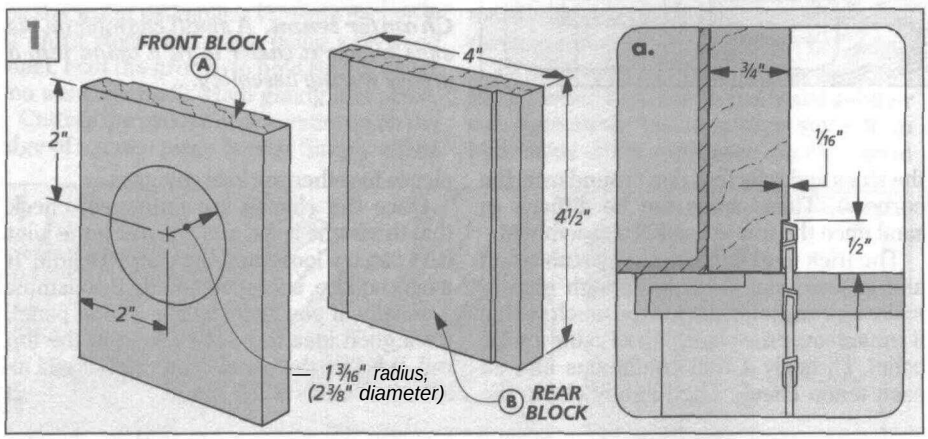

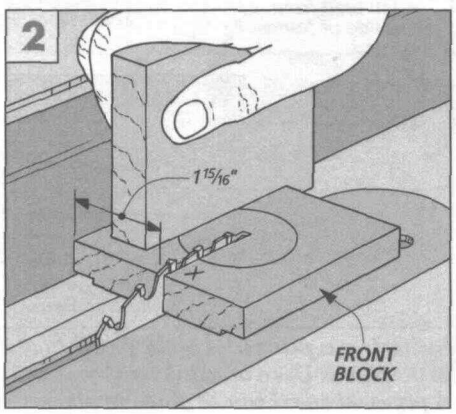

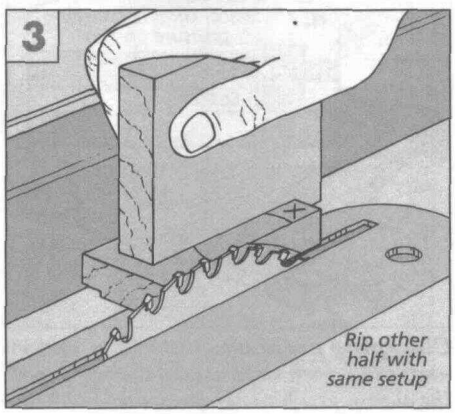

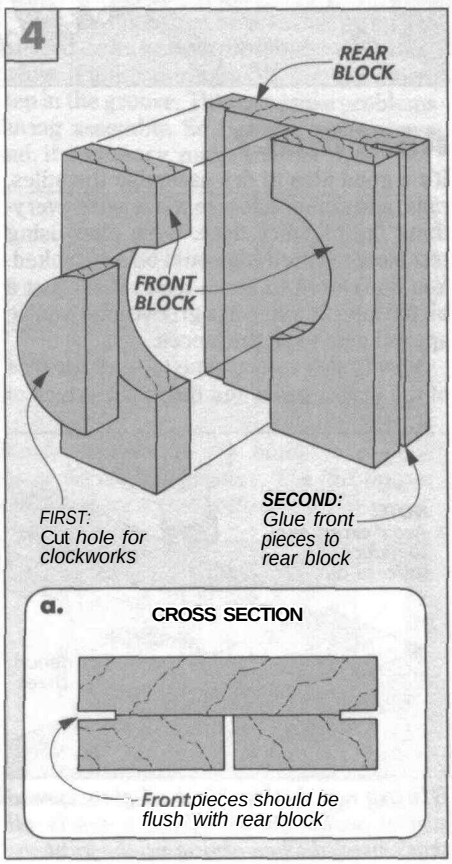

Fig. 2. The goal here is to create an 1/8" gap that's centered on the front face.

This is a simple procedure — just rip the block down the center. But it's easy to be off a hair. So using the same setup, I made a second pass with the piece from the waste side of the blade, see Fig. 3. This second pass ensures that both pieces match perfectly.

With both pieces ripped to the same size, you can now cut the hole for the clock movement and sand it smooth, see Fig. 4.

ASSEMBLY. Now that there's a hole for the movement, it's time to put the pieces back together, see Fig. 4. To do this, simply glue the two halves of the front block to the rear block. Note that the two halves of the front block aren't glued to each other. Instead, the blocks are flush at the sides (as well as the top and bottom ends).

CLOCK TOP & BOTTOM. The body of the clock is now complete. So next, I worked on the top and bottom of the clock. These are nearly identical. Each consists of a layer of molding and a rectangular cap or base, see drawing at right.

MOLDING. To make the molding (C), I first cut two 1/4"-thick blanks to finished dimensions — 1/2" larger than the body of the clock in both width and length, see drawing at right. (My molding blanks ended up 2" wide and 4 1/2" long.)

The next thing you need to do is rout a 1/4" roundover around one face of both pieces, see Fig. 5. Note: The router table works best here. But it's a good idea to take a couple precautions. Because these molding pieces are so small, I added an auxiliary fence to reduce the opening around the bit. Also, to reduce chipout, use a backing board and rout the ends of the molding first.

PAINT. Before going on, I painted the molding to match the trim around the clock movement. (It's much easier to do this before it's assembled.) I gave each piece a couple coats of black paint, being careful to avoid the outside faces of the blocks, see drawing above. This would prevent a good glue bond when the cap and base are added.

At this point the molding pieces can be screwed to the main body of the clock, see drawing above. They're centered on the body both side-to-side and front-to-back.

CAP & BASE. Now, all that's left to complete the clock is to add the cap and base.

The cap (D) and base (E) are nearly identical, see drawing above. They're 1/4" larger in length and width than the molding. (Mine ended up 2 1/4" wide and 4 3/4" long.) But the pieces aren't the same thickness. If they were, the clock would look "top heavy." So the cap is cut from 1/4"-thick stock, while the base is cut from 3/4" stock.

Now the cap and base pieces can be glued to the molding. You want to avoid squeeze-out here, so spread the glue thin and stay 1/2" away from the edges.

Finally, before installing the clock movement, I applied a couple light coats of tung oil to all the parts of the clock. ❑

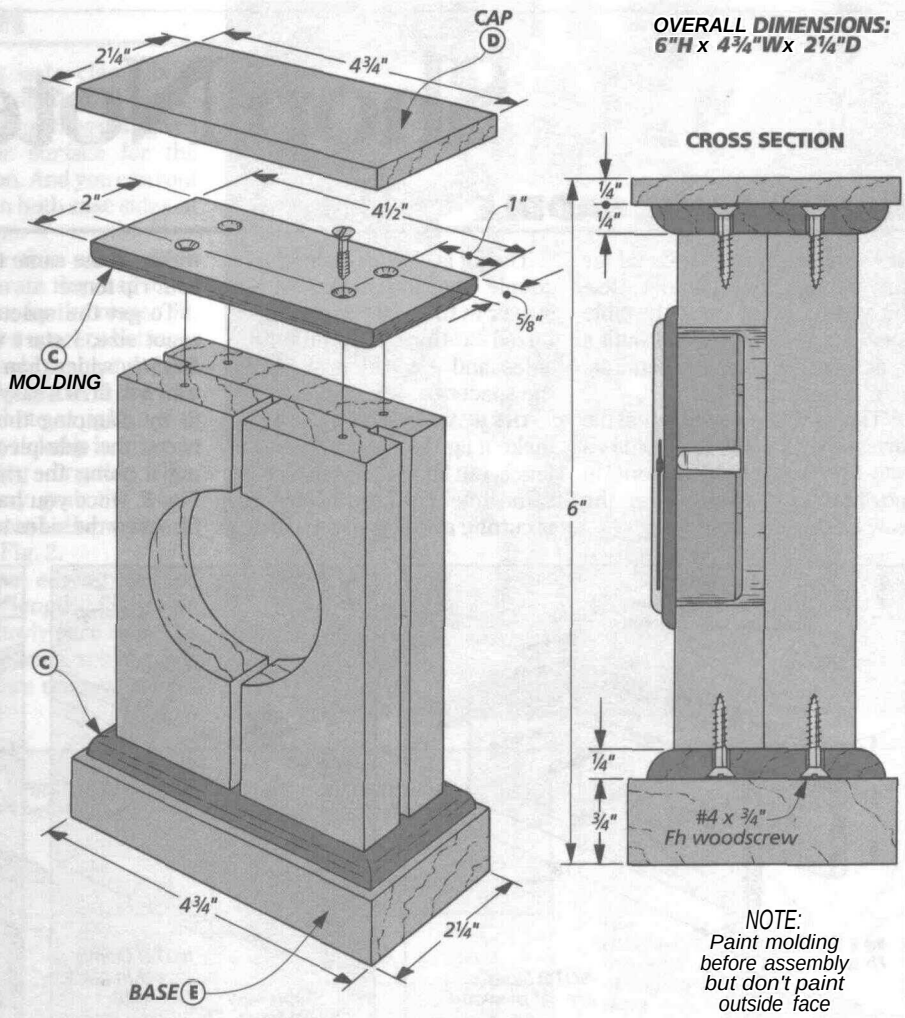

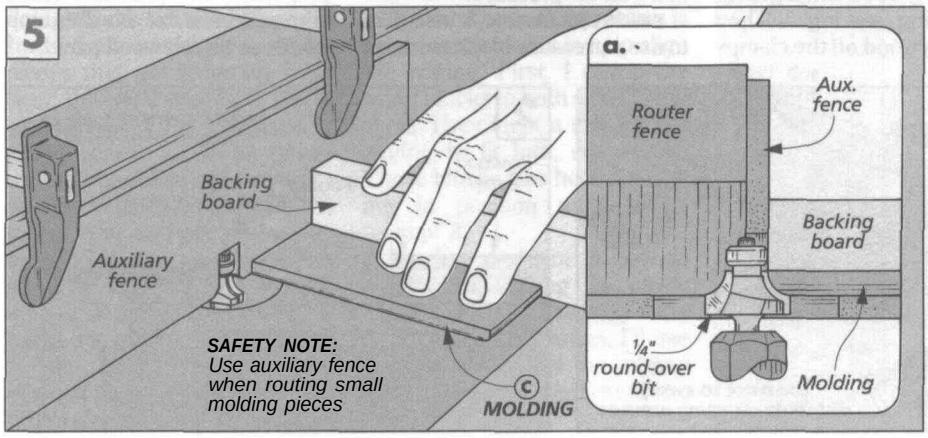

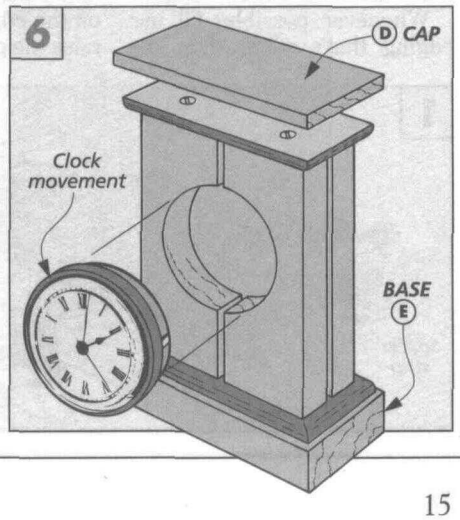

Shop Notes

RAISED PANEL SADDLE

■ To make the raised panel for the cottage wall cabinet (featured on page 6), I used the table saw. But to do it safely, I built a quick jig that holds the panel securely during the cut.

The jig is like a saddle that fits over the rip fence. It provides a way to securely hold the panel in position as it passes over the saw blade.

The jig is easy to make. Just a couple plywood pieces with a spacer in the middle, see Fig. 1. I used ¾"-thick plywood for the sides and 1½"-thick stock for the spacer.

THE SPACER. The idea is to make a jig that fits snug on the fence, but slides smoothly at the same time. The key to doing this is cutting a spacer to the correct width — the same thickness as your rip fence.

To get the spacer cut to the exact size, I start with a piece *slightly* wider than needed and trim it to fit. It's easy to "test" the fit by clamping the spacer between the side pieces and sliding it along the rip fence, see Fig. 2. Once you have a perfect fit, screw the sides to the spacer. Note: The side piece that holds the panel should be square to the table after assembly.

CUTTING THE PANEL. It's easy to cut a raised panel. Just install it on the jig and hold it in place with a couple clamps. Keep the clamps positioned out of the way to avoid hitting the blade. Then feed your panel slowly past the blade to make the cut.

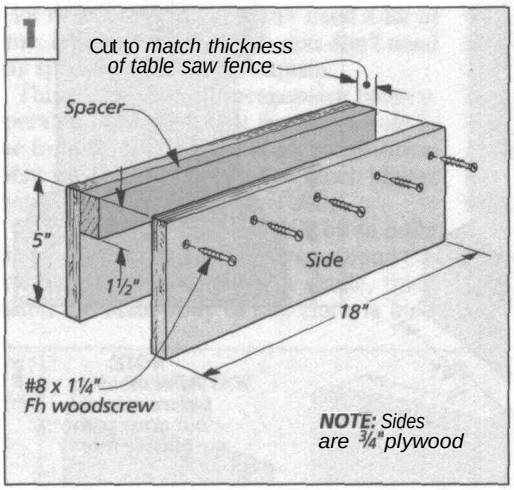

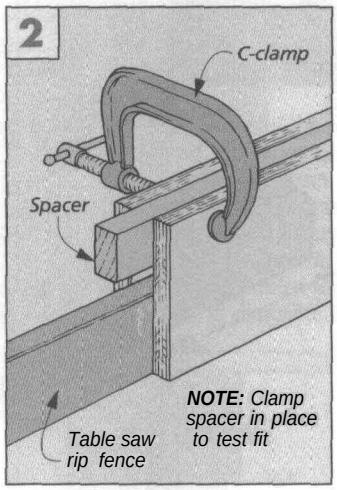

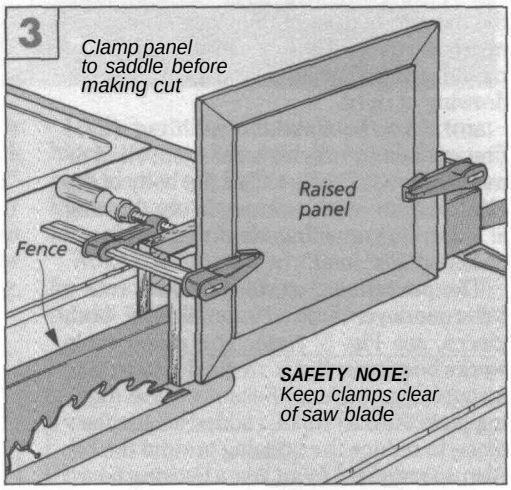

EDGING PLYWOOD

• It can be a real challenge edging plywood (like the sides of the tower bookcase on page 18). The edging strips never seem to stay where I want them. Fortunately, there are a few tricks to make installing edging easier.

Whenever possible, I'll use edging that's wider than the thickness of the plywood, refer to Fig. 2. That way, alignment with the plywood isn't critical. It will be trimmed flush later.

SPACERS. I also use spacers (strips of ¼"-thick Masonite) under the plywood when gluing on the edging, see Fig. 1. They raise the plywood off the clamps to keep the edging centered, see Fig. 2.

The spacers also help when it comes to clamping. Raising the plywood pieces puts them in line with the screw on the clamp for more direct pressure.

PRESSURE BLOCK. I also like to use a pressure block between the clamp head and the edging. It helps distribute the clamping pressure, so fewer clamps are needed, see Fig. 1. Plus, it protects the edging from dents and scratches from the clamp jaw.

I made my pressure block from a piece of 2x4. It's the same length as the plywood panel.

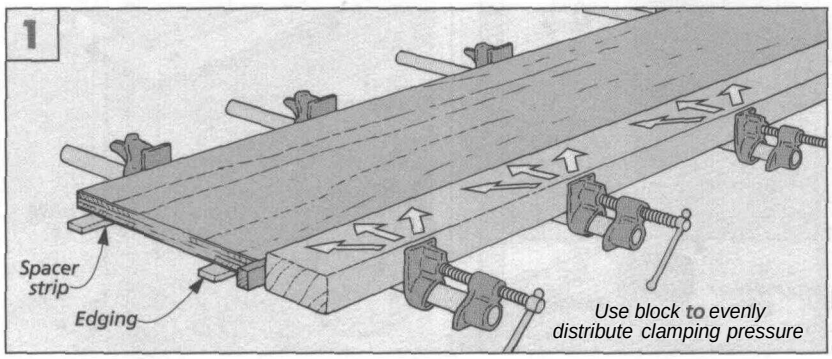

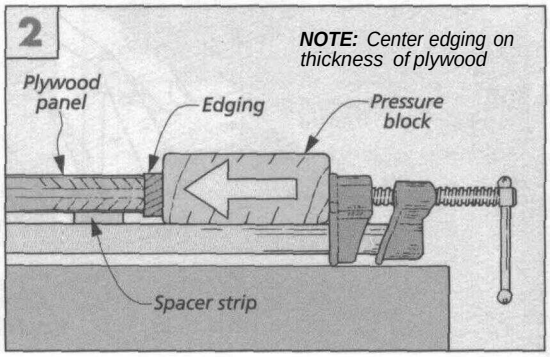

TRIMMING EDGING FLUSH

• Once the edging was glued on the sides of the tower bookcase (see page 18), it needed to be trimmed flush. To do this, I used a router with a flush trim bit. But the sides of the tower bookcase presented a few problems.

First, the thin plywood sides don't give the router much to sit on. Which makes it easy to tip the router and gouge the edging. Second, the bearing on the router bit falls into the dadoes for the shelves — also gouging the edging.

Fortunately, both problems are easy to solve. To prevent the bearing from dropping in the dado, all that's needed is a filler strip to fill in the opening, see Fig. 1. Cut the strip so that it fits snug in the dado and just thick enough to fit flush with the face of the plywood.

The trick to keeping the router from tipping is to clamp both side pieces together. This accomplishes two things. It gives you a wider surface for the router to sit on. And you can rout the edging on both case sides at the same time.

To make this work, you'll have to separate the case sides to make room for the router bit. I clamped 2x4 spacers between the sides to hold them apart and make a wide platform for the router, see photo at right.

One thing to keep in mind is is the routing direction. The router bit may grab the workpiece if you rout in the wrong direction, see Fig. 2.

Finally, the edging can be trimmed to length. I'll use a chisel and slowly pare away the excess on the ends, see Fig. 3. It leaves a square edge with very little chipout.

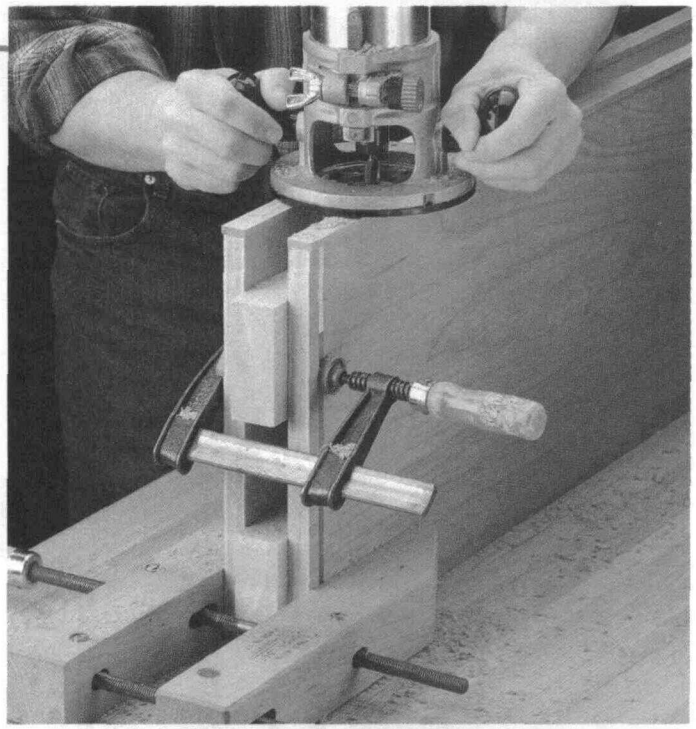

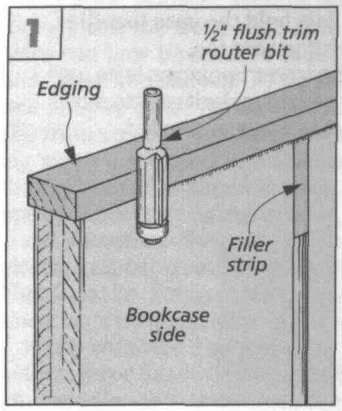

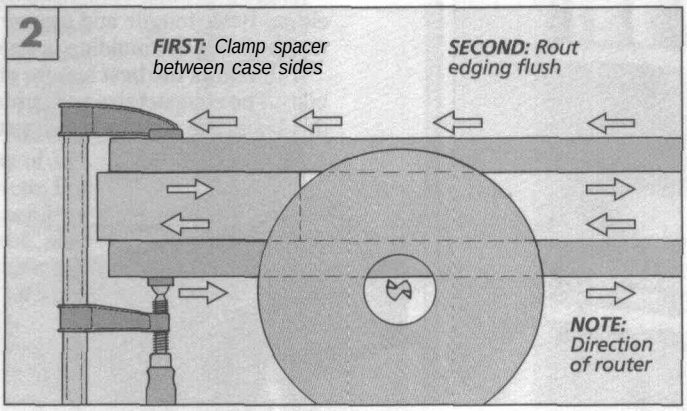

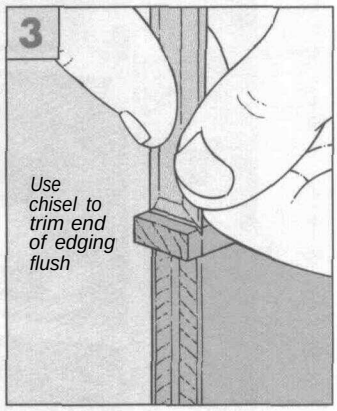

EXACT-SIZED EDGING

• When it came time to install edging to the fixed shelves on the tower bookcase, I ended up doing things a little differently. Instead of installing oversize pieces that get trimmed flush later, the shelf edging is cut to exact size and glued in place.

The reason for doing things differently is the narrow edge on the shelf. It's too easy for the router to tip and gouge the edging. So I like to cut the edging strips for an exact fit. That way, only a little light sanding is needed to make them fit flush.

One problem you run into when applying edging this way is keeping it aligned with the edge of the plywood. After the glue is applied, the edging always slides out of place.

My solution to this problem is to use scrap blocks to help align the edging. First, I clamp the scrap blocks to both sides of the shelf. They form a slot for the edging to fit into, see Fig. 1. These blocks also hold the edging in position until I can "clamp" it.

Another problem is how to clamp the edging in place. There's really no easy way to do it. So instead of clamps, I'll use duct tape. It pulls the edging tight against the shelf until the glue dries.

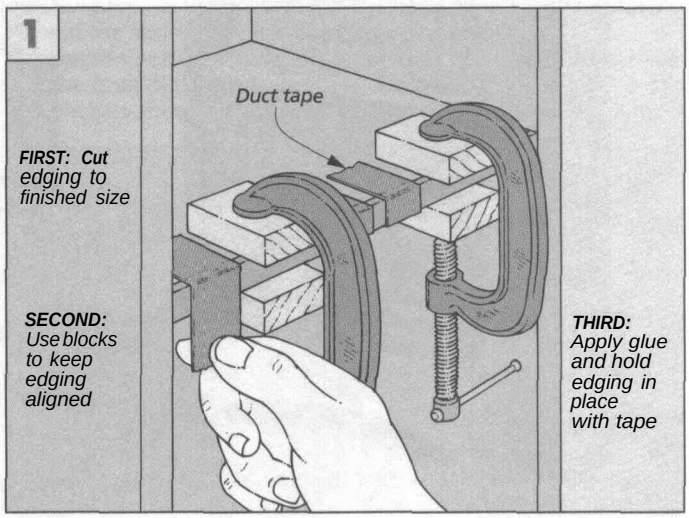

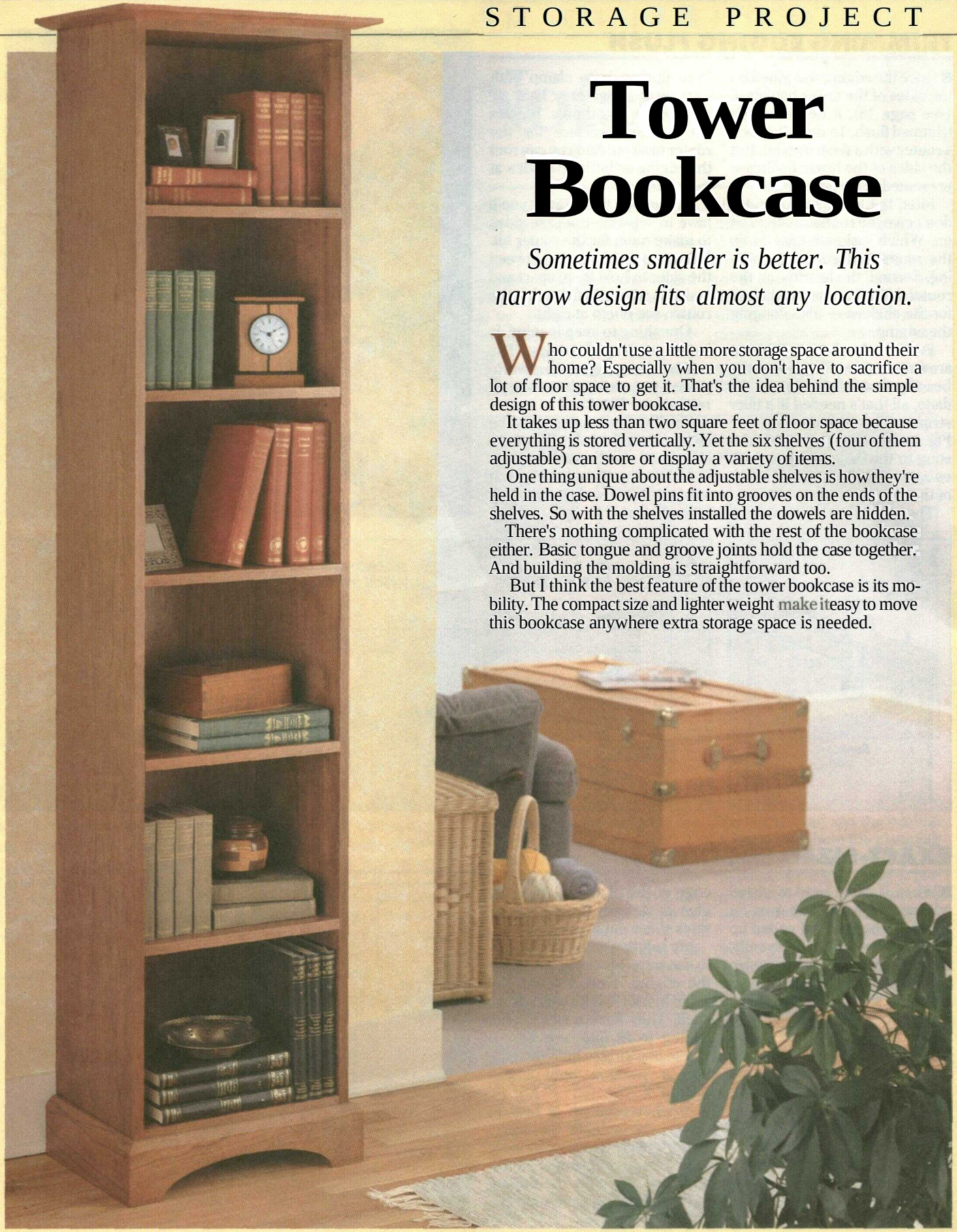

Tower Bookcase

Sometimes smaller is better. This narrow design fits almost any location.

Who couldn't use a little more storage space around their home? Especially when you don't have to sacrifice a lot of floor space to get it. That's the idea behind the simple design of this tower bookcase.

It takes up less than two square feet of floor space because everything is stored vertically. Yet the six shelves (four of them adjustable) can store or display a variety of items.

One thing unique about the adjustable shelves is how they're held in the case. Dowel pins fit into grooves on the ends of the shelves. So with the shelves installed the dowels are hidden.

There's nothing complicated with the rest of the bookcase either. Basic tongue and groove joints hold the case together. And building the molding is straightforward too.

But I think the best feature of the tower bookcase is its mobility. The compact size and lighter weight make it easy to move this bookcase anywhere extra storage space is needed.

CASE

The case is the heart of this project. It's just an upright box with three fixed shelves installed between two vertical sides.

SIDES. The vertical case sides (A) are cut first to finished size. They're ripped from a sheet of ¾"-thick plywood (I used cherry), see drawing at right. Note: When cutting the pieces to length, it's a good idea to use a plywood blade or a crosscut blade with at least 50 teeth. It will help reduce the amount of chipout on the ends.

With the sides cut to size, the next step is to cut ¼"-wide dadoes at both ends and across the middle. Later these dadoes hold the fixed shelves in the case.

To cut the dadoes, I used a ¼" straight bit in a hand-held router. I was tempted to use a dado blade in the table saw. But the pieces are just too long to handle easily. Especially when you're trying to cut the dadoes near the ends of the sides.

The easiest way to rout the dadoes is to lay the sides edge-to-edge with the inside faces up (like an open book), see Fig. 1. Then rout each set of dadoes in one pass using a straightedge to guide the router.

PLYWOOD EDGING. With all three sets of dadoes cut, the front edge of the plywood sides can now be covered to hide the plies and "stop" the dadoes. To do this, I ripped two long strips of hardwood case edging (B) from a piece of ¾"-thick stock. The edging strips are ripped to a thickness of ¼", then glued and clamped in place. Note: For tips on installing edging, refer to page 16.

BACK RABBET. Now, to finish the side pieces, a rabbet is cut on the back edges, see Figs. 2 and 2a. This creates a recess for a plywood back installed later.

FIXED SHELVES. To join the sides together, three fixed shelves are glued to the top, middle, and bottom of the case. All three shelves are cut from ¾"-thick plywood and are made the same way.

I started on the fixed shelves (C) by first cutting them to finished size, see drawing. Next, ¼" tongues are cut on both ends, see details above at right. These tongues are sized to fit in the dadoes cut in the side pieces and hold the case together.

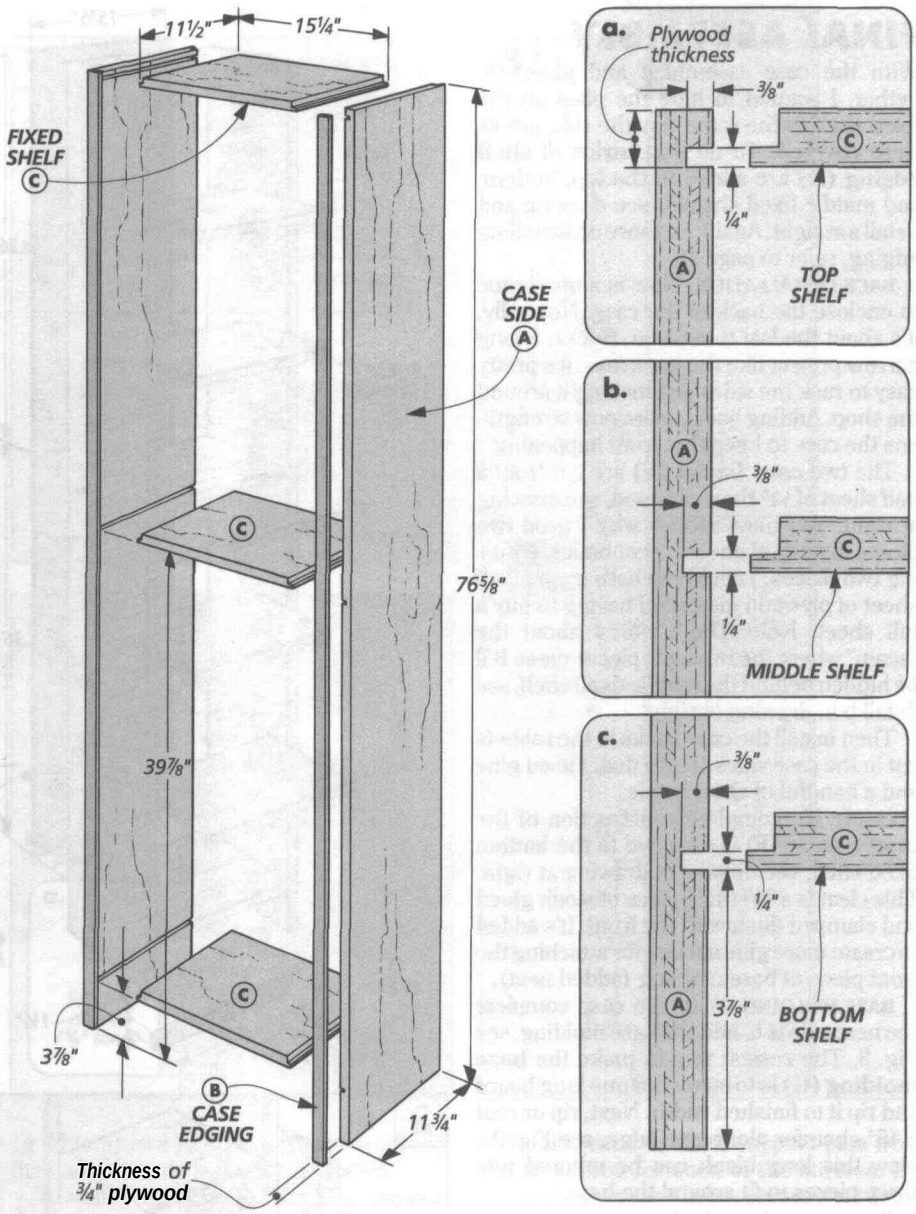

CASE ASSEMBLY. Once the tongues on the shelves fit snug in the sides, the case can be assembled. To do this, slide in the shelves until the front edges of the tongues butt up against the edging strips at the front of the case. At the same time the shelves should sit flush with the edges of the rabbets on the back of the case. (If needed, trim the shelf's back edge until it's flush.)

Finally, glue and clamp the fixed shelves between the side pieces. Check that everything is square after the clamps are tight.

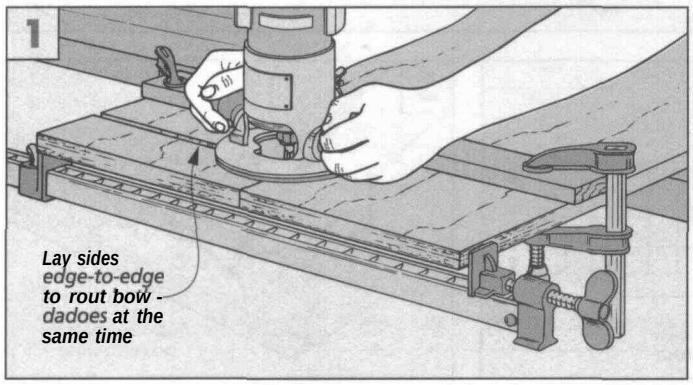

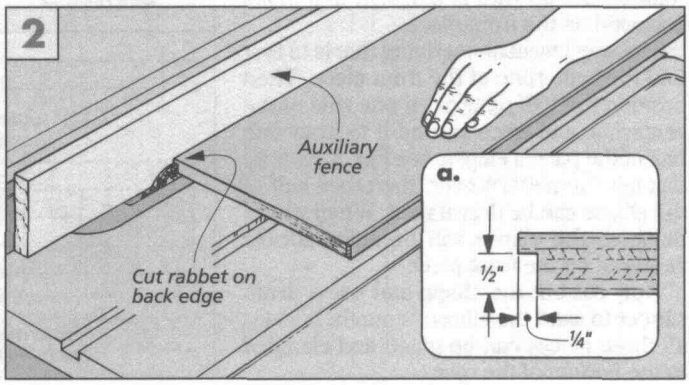

FINAL ASSEMBLY

With the case assembled and glued together, I wanted to hide the plies on the fixed shelves the same way the side pieces were covered. To do that, strips of shelf edging (D) are added to the top, bottom, and middle fixed shelves, see drawing and detail a at right. Again, for more on installing edging, refer to page 16.

BACK INSTALLATION. Now is a good time to enclose the back of the case. Normally, it's about the last thing I do. But on a long narrow project like the bookcase, it's pretty easy to rack the sides just moving it around the shop. Adding back pieces now strengthens the case to keep that from happening.

The two case backs (E) are cut from a half sheet of ¼"-thick plywood, see drawing at right. You may wonder why I used two pieces instead of one. It's economics. By using two pieces, I could cut both from a half sheet of plywood instead of having to buy a full sheet. Note: Don't worry about the "seam" where the two back pieces meet. It'll be hidden behind the middle fixed shelf, see detail b in drawing at right.

Then install the case backs in the rabbets cut in the case sides. To do that, I used glue and a handful of short brads.

CLEAT. To complete construction of the case, a cleat (F) is attached to the bottom fixed shelf, see detail c in drawing at right. This cleat is a ¾"-thick piece of stock glued and clamped flush with the front. It's added to create more glue surface for attaching the front piece of base molding (added next).

BASE MOLDING. With the case complete the next step is to add the base molding, see Fig. 3. The easiest way to make the base molding (G) is to start with one long board and rip it to finished width. Next, rip or rout a 45° chamfer along one edge, see Fig. 3a. Now this long blank can be mitered into three pieces to fit around the base.

Before attaching the base molding to the case, a half ellipse is cut in the front piece. It adds a decorative detail to the bookcase.

To create this shape, first enlarge the half pattern below to create the shape of the partial ellipse, see Fig 4. It isn't critical that you match the pattern exactly. But what you want to end up with is a design that looks balanced on the front piece.

The way I went about doing that is to first find the centerline of the front piece. Then position the half pattern on one side of the centerline and trace around it to draw one half of the partial ellipse, see Fig. 5. Now by flipping the pattern over, the other half of the ellipse can be drawn next. When you're finished, the ellipse will be automatically centered on the front piece.

Now cut out the shape and use a drum sander to sand the ellipse smooth. Finally, all three pieces can be glued and clamped to the bottom of the case.

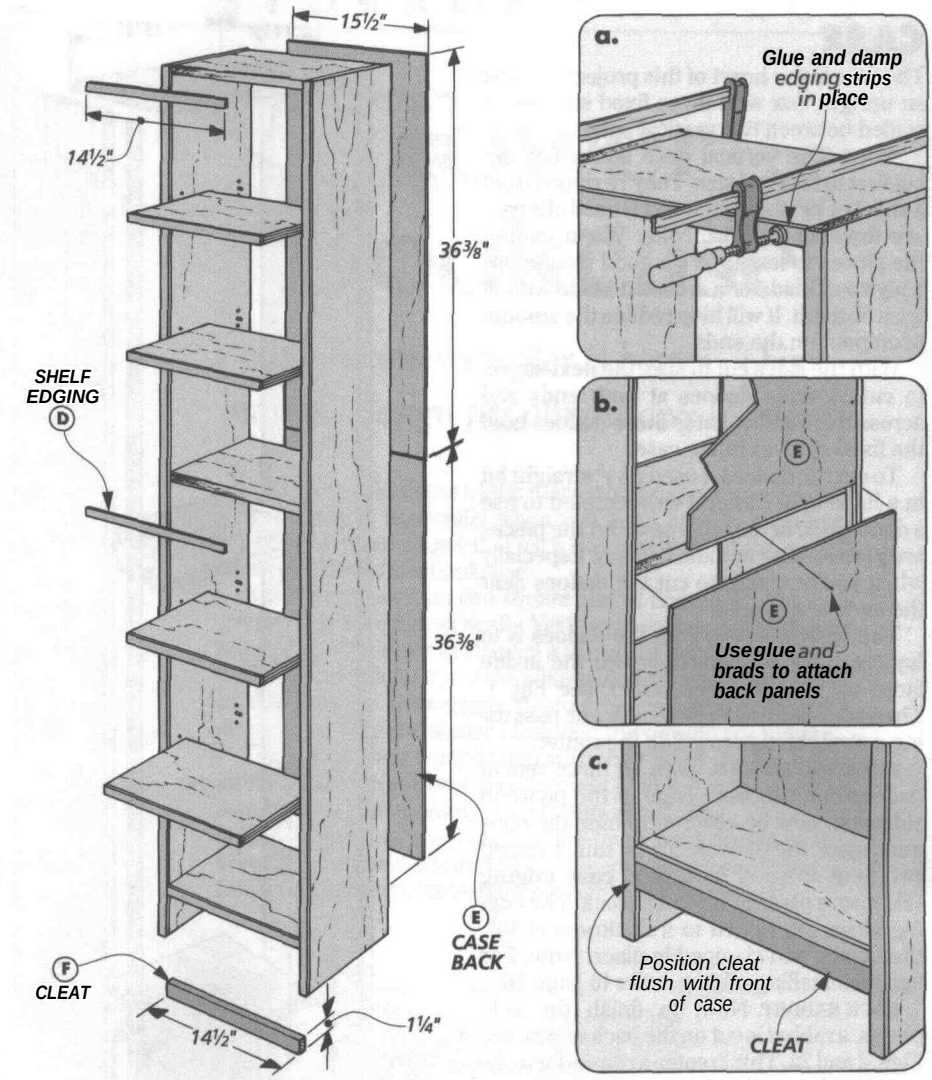

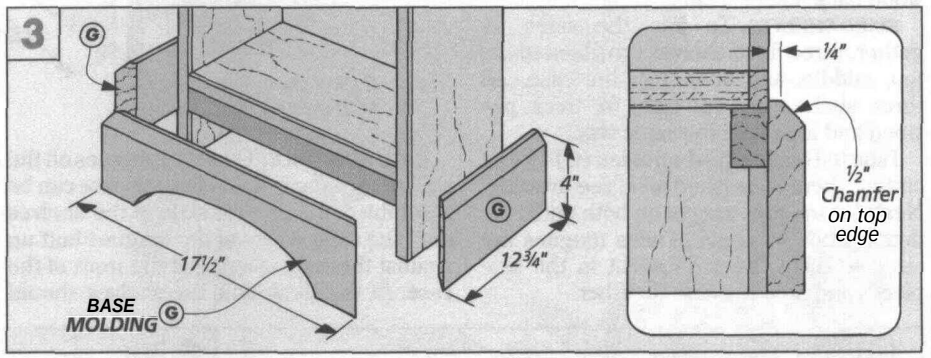

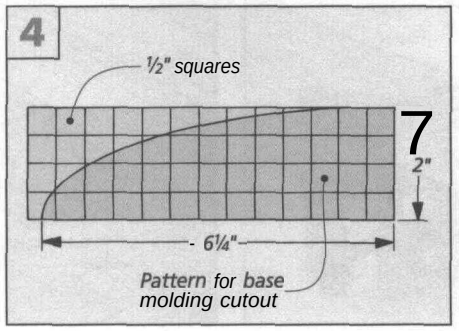

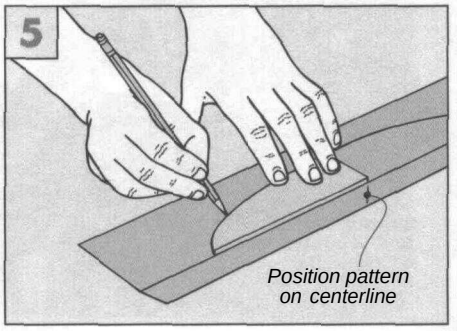

TOP MOLDING. To complete the molding for the case, top molding (H) is added next, see Fig. 6. This is made in much the same way as the base molding. First, a blank for all three pieces is ripped to finished width from ¾"-thick stock.

Next, a 12° bevel can be ripped on one face, see Fig 6a.

Now miter the ends of the pieces to fit around the top with a 2" overhang. Each piece can be glued and screwed in place to form a U-shaped frame to sit on top of the case. Finally, install flat-topped plugs in the screw holes to fill in the openings.

SHELVES. Now, all that's left for this bookcase is to add the rest of the shelves. So make four adjustable **shelves** (I) to fit inside the case, see Fig. 7. These shelves are the same width as the fixed shelves (C) that hold the case together (11½"). As for their length, I cut the shelves 1/16" shorter than the opening in the case.

The only thing unusual about the adjustable shelves is the way they're held in the case. It's a system of shelf support pins that fit in holes in the case. Not too unusual. But the shelves don't rest on top of the support pins. Rather, they fit *around* the pins, see Fig. 7a. It's all done with a simple groove in the ends of the shelves.

To cut the ¼"-wide groove, I used a dado blade in the table saw. Note: The grooves should be centered on the thickness of the shelves so they sit level.

SHELF EDGING. After cutting the grooves on the four adjustable shelves, a piece of shelf edging (J) is glued and clamped to the front edge of each shelf. The edging hides the grooves as well as the plies of the plywood. They're attached with glue, just like the edging strips on the fixed shelves.

DOWEL PINS. To support the shelves in the bookcase and make them adjustable at the same time, short lengths of ¼"-diameter dowel pins are installed in the sides. The holes for these shelf support pins can be positioned most accurately with a shop-built jig. This is just a ¾"-thick piece of wood with the holes already laid out and drilled.

To make the holes for the shelf support pins, first mark the location of the holes inside the case, see Fig. 8. Then use the jig as a template to drill the holes for the shelves.

Finally, cut four shelf support pins from the dowel rod for each of the shelves. Because the pins need to be removable, I didn't stain or finish them. Just add a coat of wax so they will be easy to pull out when changing the height of the shelves. ❑

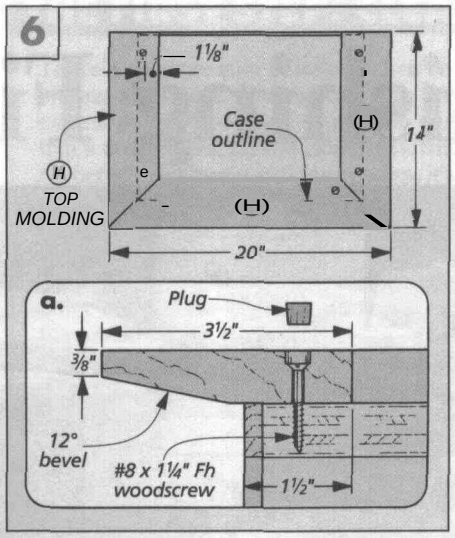

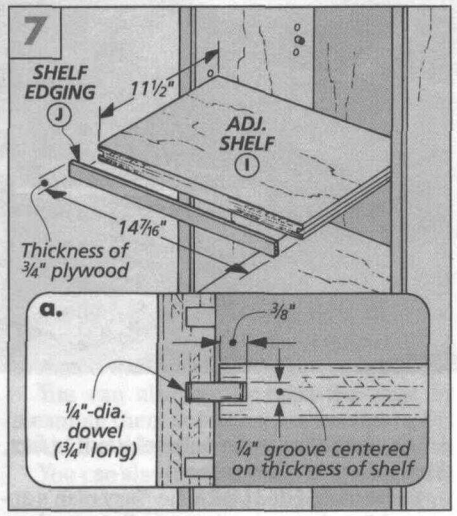

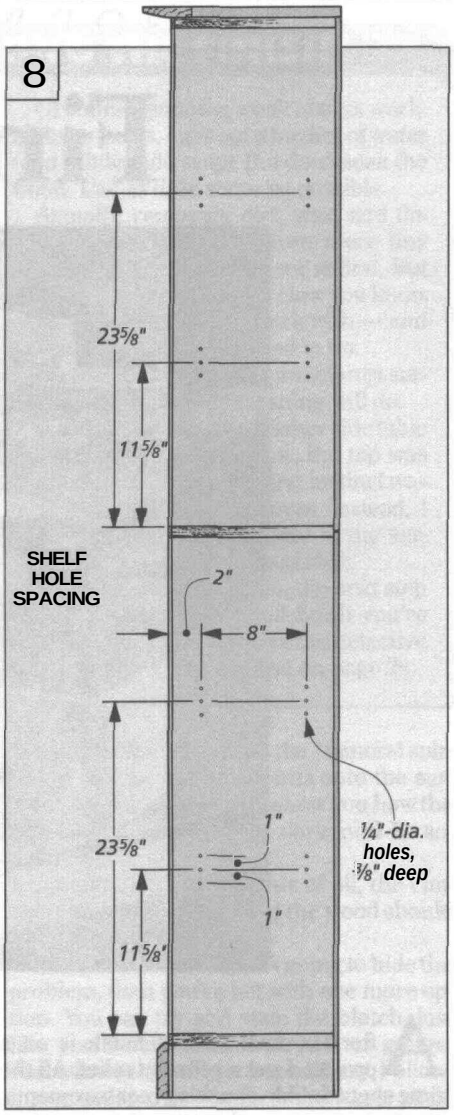

MATERIALS

A	Case Sides (2)	3/4 ply - 11¾ x 76⅝
B	Case Edging (2)	¾ x ¼ - 76⅝
C	Fixed Shelves (3)	3/4 ply - 11½ x 15¼
D	Shelf Edging (3)	¾ x ¼ - 14½
E	Case Backs (2)	1/4 ply - 15½ x 36⅜
F	Cleat (1)	¾ x 1¼ - 14½
G	Base Molding (1)	3/4 x 4 - 45 rgh.
H	Top Molding (1)	¾ x 3½ - 50 rgh.
I	Adj. Shelves (4)	¾ ply - 11½ x 14⁷⁄₁₆
J	Shelf Edging (4)	¾ x ¼ - 14⁷⁄₁₆

¾"x 48° x 96" Cherry Plywood

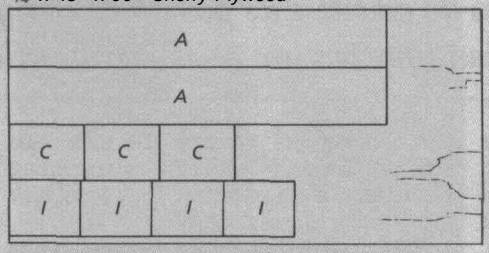

¾• x 7" x 96" Cherry (4.7 Bd. Ft.)

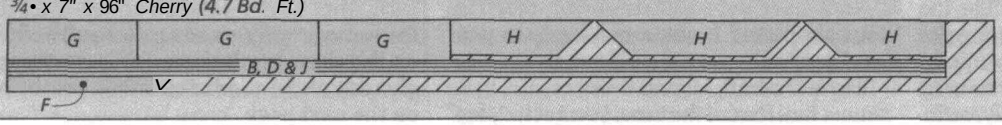

SUPPLIES

- (36) #16 x ⅝" Brads
- (6) #8 x 1¼" Fh Woodscrews
- (1) 1/4" x 18" Birch/Maple Dowel
- (6) ⅜" Cherry Flat-top Plugs

¼"x 48" x 48" Cherry Plywood

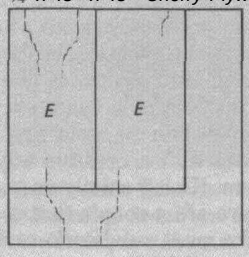

Finishing Fixes

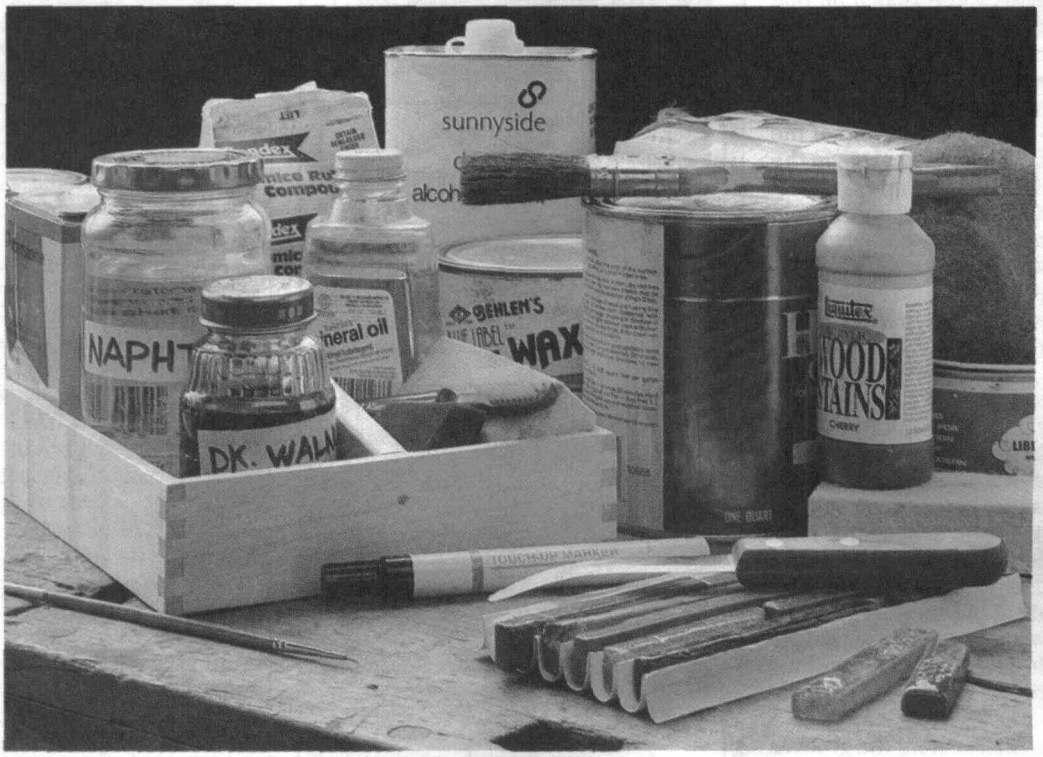

After the final coat of finish is on a project, I get a sense of relief. All the time spent double-checking measurements, test-fitting joints, and sanding every surface to perfection has paid off. The project looks great — as good as it's ever going to look. Of course, I want it to stay that way as long as possible, but it's only a matter of time...

That's when the anxiety kicks in. Suddenly I'm overcome with this urge to protect my project like a newborn baby. But this mothering instinct can't prevent the inevitable. Whether the project is being moved into place, being passed by normal traffic, or attacked by the grandkids, it doesn't take long before a scratch, nick, or dent appears.

These problems are really irritating. For being so small, they attract a lot of attention. The rest of a project can be flawless. But just one scratch or dent acts like a magnet. It automatically "pulls" your eye right to it.

If you're like me, your first reaction is to come up with a creative way to hide the problem. (Using a doily or rearranging the furniture are a couple that come to mind.) And like most woodworkers, I hate to even think of refinishing a project. Luckily, refinishing isn't always the only solution. In fact, I only do it as a last resort.

So what do I do? I take the "lazy man's approach" and start by doing as little work as possible. My goal is simply to fix the problem without creating extra work for myself.

With most scratches and dents, you don't need to make the blemish disappear completely. All you want is to fool the eye into not noticing the damage. To make the scratch blend in with the surrounding wood. After all, most people don't scrutinize every square inch of a project.

The secret to fixing a finish is to do as little as possible. The goal isn't perfection — it's camouflage.

Best of all, hiding minor damage takes a lot less time than refinishing. You probably already have the supplies you need right in your shop. And if not, a quick trip to your local hardware store should supply the rest.

To be truthful, I found these repairs to be almost fun. Part of the time, you get to "play" detective. After all, you don't always know (or at my age, you can't always remember) what finish is on a piece of furniture. Or if it was stained. Or what caused the damage.

The rest of the time, you're a problem solver. Of course, not every solution is going to work. But this isn't a big deal. Just keep a couple things in mind.

The first thing I'll do is ask myself a question. Will the solution be worse than the problem? For instance, you might think it'd be easy to sand out a scratch. But the sanding will make more scratches on the finish and may even create a light spot in the wood — a much bigger problem.

So, thinking through the process will often save you a lot of extra work.

Then to be on the safe side, always test your idea first in an inconspicuous spot. Under the top of a table or behind a back leg. If it doesn't work or if it creates another problem, at least it won't be visible.

So where do you start? I always start with the same procedure, regardless of the finish or the damage. Before doing anything, I give the project a good cleaning, see the box on the next page.

OIL FINISHES

A wipe-on oil finish is one of the easiest finishes to apply. That's the good news. They're also the easiest to damage, since there's practically no film on the wood.

Actually, repairing damage to an oil finish is more of an exercise in good camouflage. And fortunately, most minor flaws can be easily hidden or at least minimized.

But before you begin, ask yourself if you really want the piece to look new. After all, furniture develops character over time, so you may not want to remove all that character — maybe just the damage that draws too much attention to itself.

DULL FINISH. I've found with many projects finished with a wipe-on finish, the problem isn't damage but old age. An oil finish can quickly look dull and dry.

To rejuvenate an oil finish, all you have to do is apply a fresh coat. It doesn't have to be the same brand of finish or even the same type of oil finish.

There's no trick to applying an oil finish. Just wipe or brush it over the entire piece. (The piece should've been cleaned by now, see box at right.) Then wipe off the excess.

Of course, with some projects I also had other repairs to make. And it's a good idea to wait on the new coat until *after* all the other problems have been taken care of.

SCRATCHES. With oil finishes, scratches are pretty easy to hide. The smaller ones will darken and blend in when you add a new coat of finish. But deeper scratches may need a little more work. That's because a deep scratch is a lot lighter in color than the wood around it.

The trick is simply to stain the scratch so it doesn't stand out. And the stain you need is probably already in your finishing drawer.

Don't worry if the color isn't quite a perfect match. It doesn't have to be.

The reason for this is simple. Your eye naturally notices contrasts. So to effectively camouflage the scratch, all you need to do is minimize the contrast in color.

Repair Tip: With dark-colored woods, like walnut and cherry, it's best to make the repair slightly darker than the wood around it.

The easiest way to apply the stain to the scratch is with a small artist's brush. When it's dry, add a fresh coat of oil to the project.

DENTS. Dents are another common problem. Just like a scratch, a dent can be stained to match the wood.

You can also try to raise the dent by steaming them out with a hot iron and a wet cloth. But this won't work on broken fibers.

You can also try filling the dent with putty. But dried putty can be even more noticeable than the dent itself.

BLOTCHES. Blotches and spots are another problem. It'd be nice if you could remove them completely, but most times, the stain is deep in the wood. Still, there are some things you can do to try to minimize their appearance.

You may try what I call the "mineral spirits" test. Wipe mineral spirits onto the surface of the piece. This will show you how the wood will look when it's darkened by another coat of oil.

By adding a couple coats of oil, the contrast between the stain and the wood should be minimized.

If another coat of oil isn't going to hide the problem, then you're left with one more option. You can try and stain the blotch, just like you would stain a scratch or gouge. Sometimes this will get you half way. Following up with a coat of stain to the whole piece may blend the blotch in even more.

Unfortunately, not every project can be finished with a coat or two of oil. Some need more gloss or more protection. A film finish is the answer here, see the box on page 24. But even with greater protection, film finishes still get damaged.

THE FIRST STEP: CLEANING THE FINISH

There's a simple rule to follow when repairing any finish: Always start with the easiest possible solution — and the one that's the gentlest on the existing finish. So before you begin making repairs, it's a good idea to clean the project first.

Now when I say "cleaning," your first thought might be soap and water. Actually, water is my last resort. Ideally, you don't want to put anything on the wood that could cause damage.

Instead, I start with a solvent, usually naphtha. It dries quickly and is safe to put on any finish (but I always test it in an inconspicuous spot first, just to be safe).

If the naphtha and cloth don't seem to be removing the grime, you can try a mild abrasive like steel wool or a Scotch-Brite pad. But remember, an abrasive will affect the surface. It will dull a glossy finish. And with a thin, wipe-on oil finish, it can remove some color.

Of course, naphtha won't always work. In those cases, I get out a bucket of water (and a little mild soap). But don't soak the wood. Use as little water as possible.

Actually, removing dirt, wax, and fingerprints may uncover even more tiny scratches than you could see at first. But this isn't a step backward. Now you know what you really have to work with — and how much work you'll need to do.

On the other hand, I'm sometimes surprised at what a good cleaning will do.

With one project, the Shaker side table shown in the photos below, the top was badly stained. In fact, my first instinct was to belt sand it and start over. Instead, I gave it a good cleaning. And to my surprise, the top looked salvageable.

After the project is clean, the next step is to find out what type of finish you're working with. This is where the detective work comes in, see the box on page 24.

Removing the grime. *The first step with any project is to clean it with naphtha and a soft rag. This solvent dries quickly and won't damage the wood.*

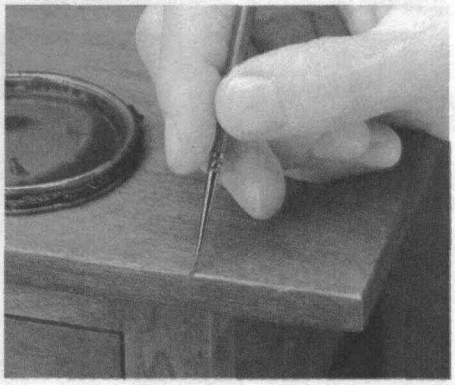

Restoring the color. *A little stain will hide nicks and scratches. And it doesn't have to match perfectly either. The goal is to minimize the contrast in color.*

Applying a new coat. *To rejuvenate a dry, dull finish and to "seal" in all your finishing fixes, simply brush or wipe on a fresh coat or two of an oil finish.*

FILM FINISHES

While I like the ease of wiping on an oil finish, many times a film finish is a better choice. For one thing, some projects look better with a glossy, formal finish. But also, they offer more protection than oils do.

Of course, film finishes do get damaged. In fact, I think Murphy's law applies here: It seems the more time you spend finishing a project, the sooner it's damaged. Fortunately, the damage can be made nearly invisible — with a little work.

QUICK FIX. A quick, temporary fix that will hide minor nicks and scratches (and make the larger ones less obvious) is paste wax. I find paste wax helpful when I don't have time to make a repair immediately. It raises the sheen of a finish and hides light scratches. And a tinted wax will minimize large scratches and dents, too. Then when I do have the time, I simply remove the wax with mineral spirits and repair the damage.

BASIC STEPS. To repair a film finish, I follow the same basic steps that I do for an oil finish — it's just a little more involved.

After you've cleaned and determined the type of finish on a project, the first step is to work on the color problems.

THE SECOND STEP: READING THE FINISH

After the piece of furniture is clean (see box on page 23), it's time to play detective. From now on, you need to know what you're dealing with. So the second step I always take is to "read" the finish to see if it's one of three things: a penetrating oil finish, an evaporating film finish, or a non-evaporating film finish.

You can *see* the difference between a penetrating oil finish and the film finishes. With a film finish, it's apparent there's something between you and the wood. On the other hand, with an oil finish, there's not much finish on top of the wood — it's got the "natural look." (If you have an oil finish to repair, see page 23.)

If you're repairing a film finish (and most store-bought furniture has a film finish), you still need to know what *kind* of film: evaporating or non-evaporating.

With evaporating finishes, like shellac and lacquer, the finish hardens into a film as the solvent evaporates. But even after it's cured, you can "soften" or redissolve the finish by adding more solvent. Though they provide much more protection than an oil, they're still somewhat easy to damage. But also easy to repair.

To see if the finish evaporates or not, begin by putting a drop of alcohol in an inconspicuous location. If the finish dissolves immediately, then it's shellac.

Next, try lacquer thinner. If it softens the finish, then it's lacquer. (It could also be a water-based finish. But they haven't been around long, so it's unlikely. Water-based finishes aren't true evaporative finishes either. They're harder to repair.)

If the finish still hasn't dissolved at this point, then it's not going to. This means the finish is a non-evaporating finish, like varnish or polyurethane.

A non-evaporating finish hardens as it reacts to the air around it, which creates a tough, protective film. This is good for preventing damage. But when you do get a nick or scratch, this type of film is also harder to repair.

RESTORING THE COLOR

To add color to a scratch or dent, there are a number of options. If there's no stain on the wood, then you can simply apply some more finish. The finish will darken the damage so it blends in. I use an artist's brush for this. It lets me get into the little scratches much easier. If the wood was stained, I'll simply paint in some new stain. (Again, the color doesn't have to be a perfect match.)

Another solution for adding color is to use a "touch-up marker." These are just like felt tip pens only they have a stain and some finish in them instead of ink. They're made for "drawing in" small scratches in furniture. The range of colors is more limited than you can achieve with a stain, but they're also much easier to use.

WATER RINGS. You don't always need to *add* color (as with a scratch). Sometimes you want to remove it. Water rings are a good example of this. Here moisture has gotten into the finish and turned it white.

Certain finishes, like shellac and lacquer, are more prone to water rings. (For the reason, see box above.) With finishes like polyurethane and varnish, this problem is less likely to occur, but once it does, the water is usually deep in the finish. So your chances for removing it aren't as good.

Removing a water ring isn't difficult. The safest and easiest solution is to put an oily substance, like petroleum jelly or mayonnaise, on the ring and let it set overnight.

If the oil doesn't work, try removing the ring with alcohol. Use a cloth rolled into a pad. Apply a little alcohol to the pad and tap it a few times to disperse the alcohol. Then wipe the pad across the ring in light passes.

But be careful. Alcohol will soften and even dissolve some finishes. If the finish gets sticky, you'll have to wait a bit between passes to allow the alcohol to evaporate.

Unfortunately, not all water stains can be fixed this way. With some, the water has stained the wood, not just the finish. In these cases, the only way to fix the ring is to strip the finish and start over.

FIXING THE HUM

After restoring the color, the next step is to fix the film of the finish. This is something you don't have to worry about with oil finishes, but on the other hand, the repair will be much less noticeable — if not invisible.

Having said that, I should mention that I don't fix every scratch or dent. Out-of-the-way scratches, like those on the legs of a table, aren't noticeable (after the color has

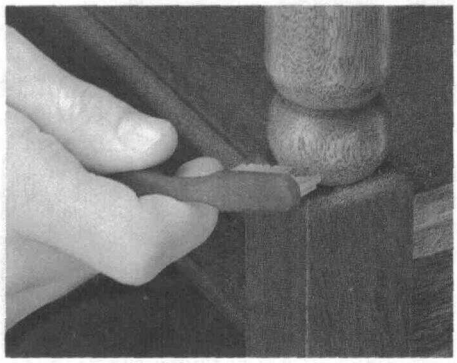

Cleaning tight spots. *When you've got to clean turned spindles and intricate carvings, a toothbrush is handy for getting into those hard-to-reach places.*

Applying a temporary fix. *Paste wax will raise the sheen of a finish and can hide scratches. To apply a thin, even coat to a large area, place a ball of wax in a cloth.*

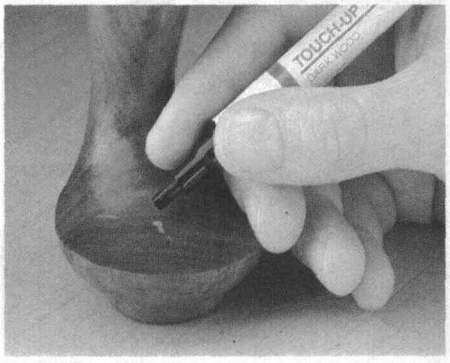

Touching up the color. *There are a number of solutions for applying color to a scratch or a dent. This touch-up marker is a quick way to add both stain and finish.*

been blended in). But the top of a table is much different. Here, you're still going to see the "break" in the surface of the film, so you'll want to fill in the depression. There are three ways to do this.

If the scratch is a light one, you might try rubbing out the scratch with pumice or rottenstone. But you have to be careful not to cut through the finish into the wood. And most scratches and dents are too deep for this solution anyway.

A "safer" solution is to fill the dent with some finish. To do this, add a drop of the same type of finish to the dent and let it dry.

The goal is to end up with the new finish standing slightly proud of the surface. (Later, you'll "sand" it level.) But don't worry about filling it completely the first time. The process will take several applications because the finish shrinks as it dries. Plus, if you apply the finish too thick, it will take much longer to dry thoroughly.

Note: With varnish and polyurethane you'll always be able to see tiny lines around the finish "patch" you just put in. These lines are there because the new finish doesn't bond to the old finish, see box on page 24.

Another way to remove a blemish is to fill in the finish with a burn-in stick, see the box below. This is the fastest method but also the most difficult. But for a large dent or gouge, it may also be the only solution.

LEVELING THE FINISH

Once the dent has been filled, there's one last step: to level the finish. Since the patch of finish stands a little proud of the rest of the surface, you'll need to "sand" it level.

This is the tricky part, so be careful. And proceed slowly — you don't want to sand through the finish and ruin all your work. I usually start off with pumice, a felt block, and a little water for lubrication.

But even after the surface is level, you're still not quite done. The problem now is the sheen. The sheen of the new finish you just applied may be different than the rest of the surface. You can try to rub out the patch to match the rest of the surface, but it might be just as easy to rub out the *entire* surface to the sheen you want. For a satin sheen, use 0000 steel wool. For a glossy sheen, rub out the surface with pumice and, if necessary, rottenstone. ❑

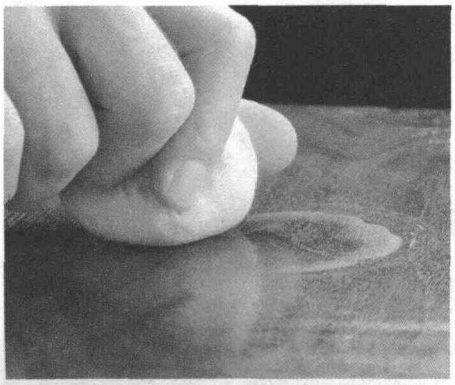

Removing a water ring. *To remove a water ring, lightly wipe across it with a cloth that's dampened with alcohol. The alcohol draws the water out as it evaporates.*

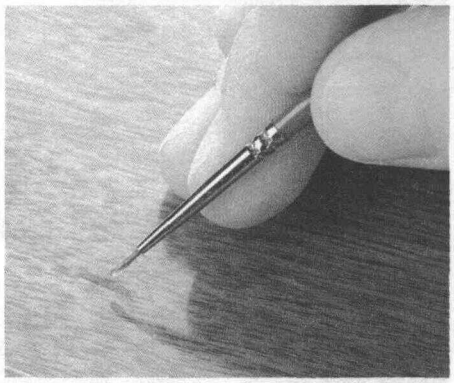

Fixing the film. *To "patch" a scratch or dent in a film finish, simply fill it in with more finish. This takes several applications — most finishes shrink as they cure.*

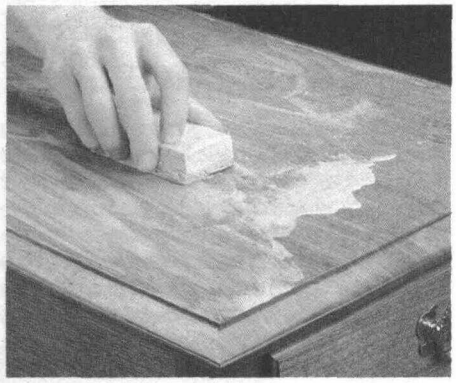

Matching the sheen. *To match the sheen of the repair with the rest of the piece, rub out the surface. Use steel wool for a satin sheen. Pumice and rottenstone for gloss.*

BURN-IN STICKS

Let's face it. If you've got a deep gouge, filling it in with multiple coats of a finish will take quite a bit of time. A much quicker solution is to use a burn-in stick. (For sources, see page 31.)

A burn-in stick is just a stick of solid finish, either shellac or lacquer. (They come in a variety of colors.) The finish is melted into the gouge with a hot knife. It doesn't matter what kind of knife you use or how you heat it — you could even use a butter knife and a blow torch. The only trick is getting the temperature just right. If it's too hot, the finish will bubble and burn. If it's not hot enough, the finish won't drip into the gouge, and it'll end up stringy (like melted cheese).

Note: If you want to take away the challenge, you can buy an electric knife that automatically heats to the right temperature.

Once the gouge is filled, you'll need to level it. Here again, the best tool is a hot, wide knife called a "dragaway" knife. It melts the burn-in finish as it pulls it away. Of course, you can just sand it down, as shown in the photo, but you have to be very careful not to damage the surrounding finish.

Obviously, this process is pretty involved, and there's more to it than I can explain here. In fact, there are training seminars specifically for teaching this type of "spot repair." Whether you attend them or not, it's a good idea to get some more information and plenty of practice before attempting this type of repair on a project you care about.

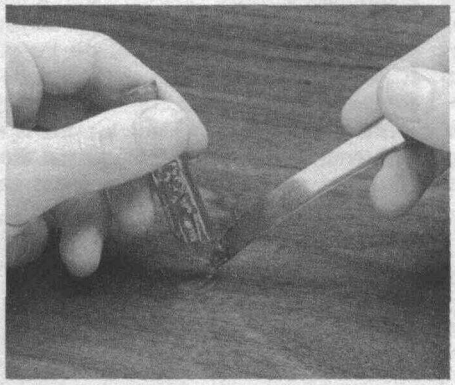

Burn-in sticks. *A burn-in stick is a stick of finish that's melted into a deep gouge or dent. The heated knife must be the right temperature, or it will burn the finish.*

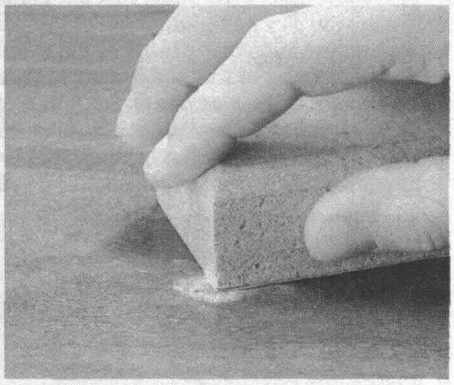

Leveling the repair. *After the gouge is filled, the finish is leveled so it's flush with the surface. But care must be taken not to damage the surrounding finish.*

Small Box

Before you put this box together, you have to cut it apart. The ends of a thick blank must be removed so the waste inside can be "carved-out."

Normally when you build a box, you think of making several individual pieces (a lid, sides, and bottom) — then putting them all together. But building the body of this box is different. It's more like carving out a pumpkin. You remove the ends of the body first and then "scoop out" the waste on the inside.

BODY

To build this small box, start with the body. (I used maple.) It's made by gluing together a couple 1½"-thick boards to make a blank that's 6" long and 6½" wide, see Layout Details below. Note: The body is oriented so the grain direction runs side-to-side. (This means the front and back ends are edge grain, while the sides are end grain.)

LAY OUT BODY. Once the glue is dry, the next step is to lay out the shape of the box on the blank, see drawings below. First find the centerline of the blank and then use a compass to draw the curved front and rear edges. Next, lay out the 1¼"-diameter opening in the front. This opening is used for a finger hole to make removing the lid easier.

REMOVING THE ENDS. With your lay-out lines drawn, the front and rear sections can be removed from the body. Just like removing the top of a pumpkin to get at the pulp, I cut off the ends of the blank to expose the middle section of the body. That makes it easy to get at the waste in the middle.

I used the table saw to cut off these front and rear pieces, see Step 1. It's a quick way to remove them from the blank. Plus the saw blade leaves a smooth, clean edge. This edge makes a nice tight joint line when the pieces are glued back together.

BAND SAW SETUP. After the front and rear pieces have been removed, the waste in the middle can be "scooped out" with a band saw. But before doing any cutting, do yourself a favor — install a new blade. I used a ⅛"-wide blade. You need the small blade to cut the ⅜"-radius in the corners.

And make sure the blade tension is set high enough. You can't always trust those markings on the side of the band saw. They'll only get you into the ball park. Even the new blade I used twisted a little when the tension was set for a ⅛" blade. So I increased the blade tension so it fell somewhere between the ⅜" and ½" settings.

REMOVING WASTE. With the band saw ready to go, transfer the lay-out lines to one side (end) of the middle body section, see Body Details and Step 2. This line indicates the thickness of the walls and the bottom of the body. One trick to drawing the radius for the corner is using a penny. It's close to a ¾" diameter, so you get a ⅜" radius.

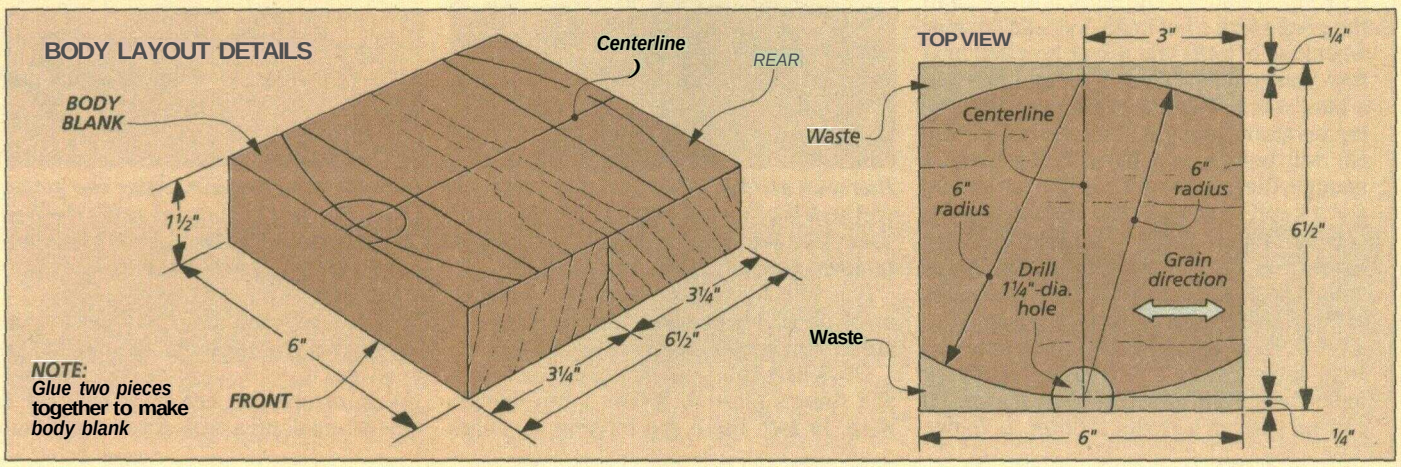

If s also a good idea to make this lay-out line good and heavy. The sawdust coming off the blade can make it difficult to see the line. You don't want to "lose" it part way through the cut.

Now start cutting out the body by feeding the workpiece slowly into the blade, see Step 3. You want to let the blade do its job. Keep in mind if s cutting through almost 4" of stock. Too much pressure, and the blade won't cut true to the lay-out line.

I also like to cut to the waste side of the line. It gives me a little extra stock if I need to clean up any saw marks later. When you're finished cutting out the waste, you'll end up with a wide, U-shaped body.

SANDING. You probably have some saw marks that need cleaning up. So it's a good time now to sand or scrape the interior of the U-shaped body. It's easier when you don't have the front and rear pieces attached yet to get in the way.

But remember to stay clear of the joint lines. If an inside edge gets rounded over, the joint line will stand out when the sections are glued back together.

GLUE-UP. After sanding the middle section, all three pieces (the front, rear, and middle pieces) can be glued back together. The secret is to use a thin, even coat of glue on the edges of the middle section *only*.

Then clamp the pieces together, see Step 4. It doesn't take much pressure to hold them in place. In fact, clamping them too tight can shift the pieces out of alignment with each other before the glue dries.

FINGER HOLE. After the front and rear sections are re-attached, a finger hole is drilled in the front piece, see Step 5. I slipped a backing board under the body before drilling this hole. It prevents chipout when the drill bit breaks through the bottom side.

CUT TO SHAPE. To finish the body, cut the curved ends on the front and rear pieces and sand them smooth, see Step 6. Here again, cut to the waste side of the lay-out lines.

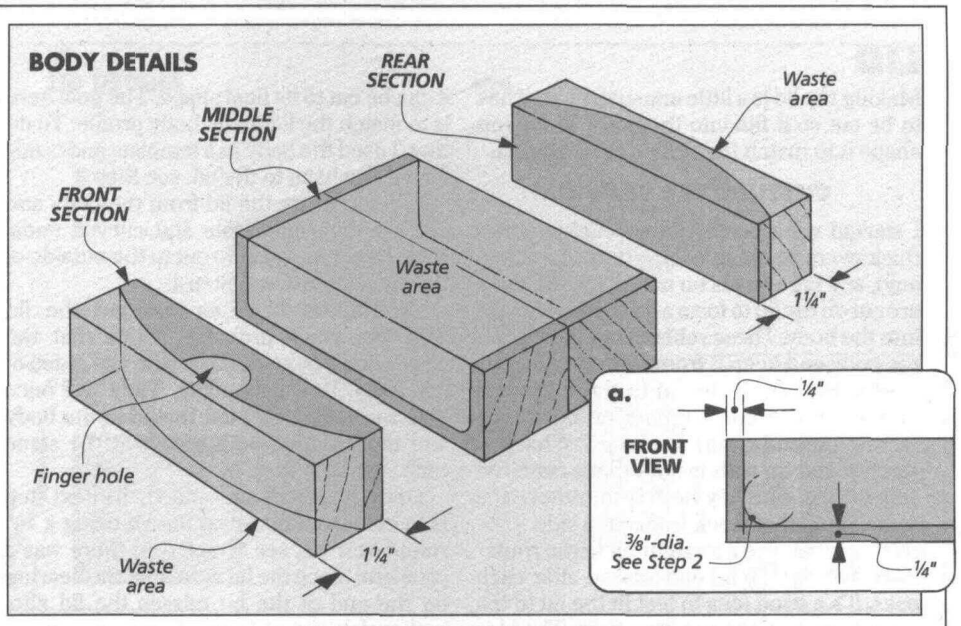

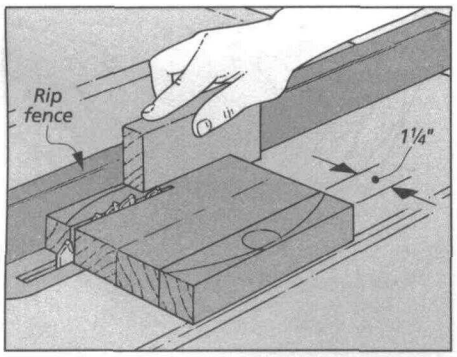

1 *Remove both the front and rear sections from the blank on the table saw. The straight joint line is nearly invisible when the pieces are glued back together.*

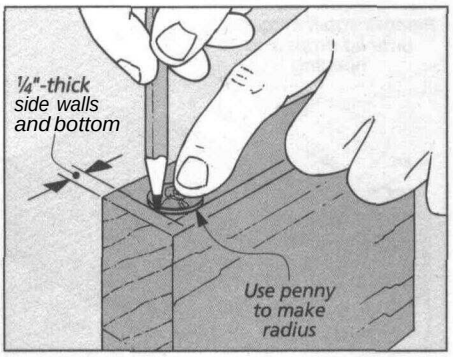

2 *Lay out the insides of the box on the front face. Both the sides and bottom of the box are ¼"-thick. Use a penny to draw the ⅜"-radius at the corners.*

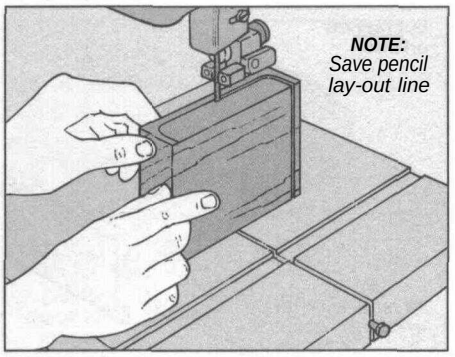

3 *Now, cut the waste from the body, leaving the lay-out lines. Feed the workpiece at a steady rate. Stopping mid-cut will leave burn marks on the wood.*

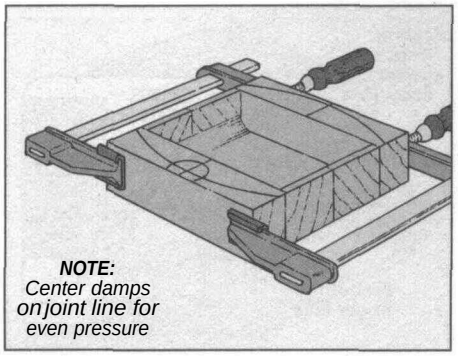

4 *When gluing the front and rear sections back on, use a thin layer of glue and light clamping pressure. Squeeze-out is difficult to remove inside the box.*

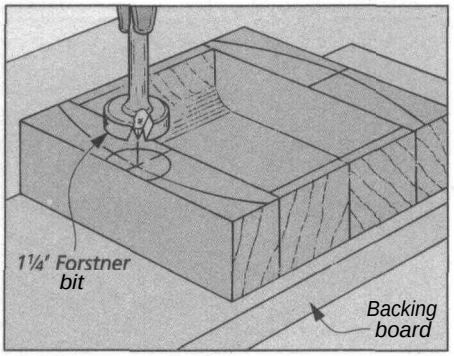

5 *Use a Forstner bit to cut a clean finger hole in the front section of the body. A backing board under the body prevents chipout when the bit breaks through.*

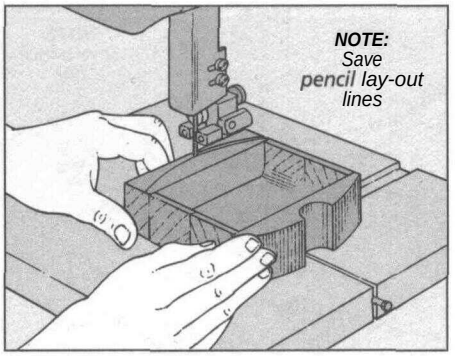

6 *To give the box its final shape, cut the curves on the front and rear sections. Then sand the sides and ends to smooth out and remove any saw marks.*

LID

Making the lid is a little unusual. First, it has to be cut so it fits into the body. Then you shape it to match the body's curved ends.

CUTTING THE SHAPE

I started work on the lid by cutting a 3/8"-thick oversize blank to size (I used mahogany), see Lid Details on next page. Rabbets are cut on the lid to form a lip so it can "drop" into the body. These rabbets hold the lid on the body and keep it from sliding off.

RABBETS. To fit the lid to the body, the first step is to cut a rabbet on each side (across the end grain), see Step 1. What you want to end up with is a lid that's centered side-to-side. The key here is to remove the same amount of stock from each side.

To do that, use a straight bit in the router table and flip the lid end-for-end after each pass. It's a good idea to test fit the lid to the body before making another pass. The idea here is to sneak up on the final size until the lid fits snug in the body.

After the rabbets on the sides of the lid are complete, the next step is to cut rabbets on the front and back ends. They center the lid front-to-back, see Step 2. They're cut the same way as the other rabbets — only wider.

LID PROFILE. Once the lid fits in the body, it can be cut to its final shape. The goal here is to match the lid to the body profile. To do that, I used the body as a template and transferred its shape to the lid, see Step 3.

Then remove the lid from the body and cut out the finger hole and curved ends. Here again you want to cut to the outside of the lay-out lines, see Step 4.

FINAL SHAPING. When you put the lid back on, you'll probably notice that the edges don't quite fit flush with the sides of the body. But that's okay. They will once they're sanded. So I left the lid in the body and then sanded both pieces at the same time, see Step 5.

Once the pieces are sanded, the next step is to cut a roundover on the lid using a 3/8" round-over bit, see Step 6. But there was a problem. Since the lid is so thin, the bearing on the end of the bit misses the lid altogether. Instead of trying to rout the lid by itself, leave it positioned in the body. Now the bearing can ride against the sides of the body while you make the cut.

CUTTING THE SLOT

All that's left to finish the lid is installing an insert in the top. It sits in a slot that's aligned with the finger hole in the body. This insert adds a decorative detail to the lid, but it's functional too. It adds a lip to the edge of the lid so it's easier to remove.

SLOT LAYOUT. The first step to cutting the slot is laying out its location on the lid. To look good, the slot (and insert) should be aligned with the finger hole.

To do that, first drill a 1 1/4"-diameter hole 1/4" deep in the top of the lid, see Lid Details and Step 7 on next page. I used a Forstner bit because its short center point won't break through the bottom side of the lid.

Now use a sharp blade (X-Acto knife) and scribe two lay-out lines from the outside diameter of the hole to the outside diameter of the finger hole, see Step 7. These lay-out lines mark the opening for the slot which is cut next. Using a sharp blade severs the wood fibers along the slot edge. This helps prevent chipout when removing the waste in the slot.

ROUTING. Now a hand-held router with a straight bit can be used to remove most of the waste from the slot, see Step 8. Just don't get too close to the lay-out lines. They'll be used as a guide to finish cleaning up the slot.

With the waste removed, the sides of the slot can be squared up with a chisel, see Step 9. Just work your way down the slot fol-

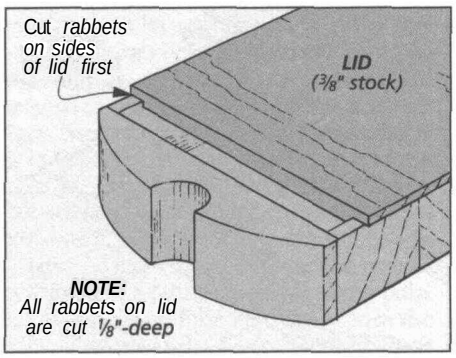

1 *To fit the lid to the box, cut the rabbets on the sides first. By removing equal amounts of stock from both sides, the lid will stay centered on the body.*

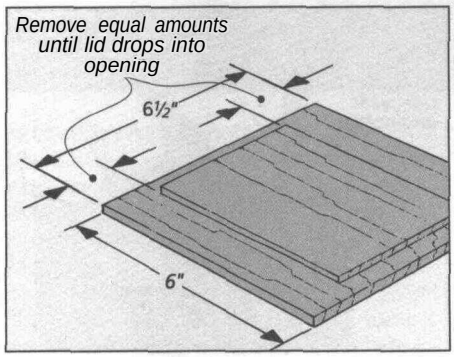

2 *Once the rabbets on the sides of the lid are complete, the rabbets on the ends are cut next. These are just wider rabbets cut the same way as the sides.*

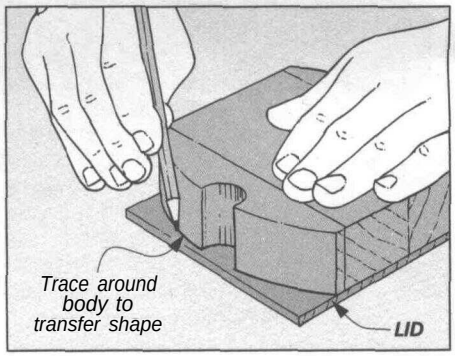

3 *Use the body as a template and trace around the outside edge to transfer the shape to the lid. That way the lid will perfectly match the shape of the body.*

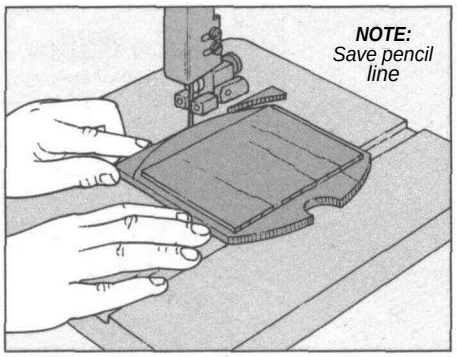

4 *Follow the lay-out lines drawn on the bottom of the lid to cut the profile. Save the lines so there's some stock left when sanding the lid to its final shape.*

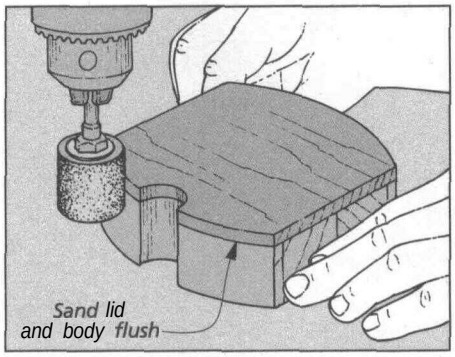

5 *After cutting out the profile, use a disc or drum sander to finish sand the lid and body. The edges of the lid should be flush with the sides and ends of the body.*

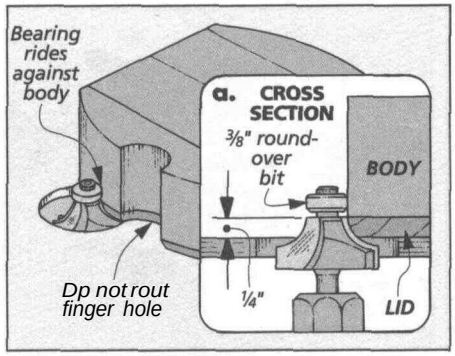

6 *A 3/8" round-over bit is used to cut a profile on the edge of the lid. Leave the lid installed in the body so the bearing on the bit can ride against the body.*

lowing the lay-out lines. When working near the finger hole, it's a good idea to use a backing board under the lid. It reduces chipout on the bottom side of the lid.

ADDING THE INSERT

The last step to finishing the lid is to install a 3/8"-thick insert in the slot. (Again, I used maple.) I cut the insert so the wood grain runs in the same direction as the lid. That way if there's any wood movement, the lid and insert will move together.

CUTTING INSERT. To make the insert, start with an oversize blank. Keep it close to the width of the slot, but extra long. Then it only takes a little sanding on the sides of the blank to get it to fit snug in the slot

I think the hardest part about making the insert is cutting the radius. The problem is shaping the end to match the radius at the end of the slot for a tight fit. So I roughed out the radius shape on the end of the insert first to get it close. Then it's just a matter of hand sanding the insert for a tight fit, see Step 10.

Once the insert fits into the slot, it can be cut to finished length. But you can't just cut it square. The end of the insert has to match the curved end of the lid. So I used a file and some sandpaper and shaped the insert to match the profile on the lid, see Step 11.

Then rout a 1/8" roundover on the top edge of the insert, see Step 12. But it's difficult (and dangerous) to rout the roundover on the end by the finger hole. So I sanded the roundover on the insert by hand instead of using a router.

GLUE UP. After rounding over the edges, the insert can be glued to the lid. Try to keep the glue away from the edges of the insert. Otherwise, you'll have some squeeze-out that's hard to clean up.

Finally, finish sand the body and lid. Then seal the pieces with a good varnish and add a top coat of paste wax for extra shine. ❑

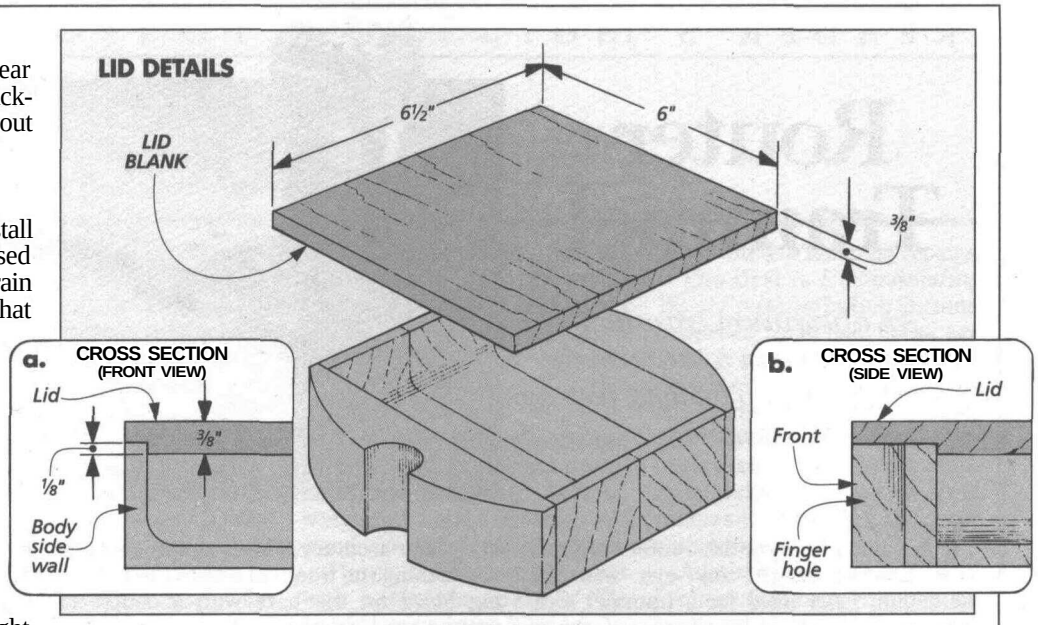

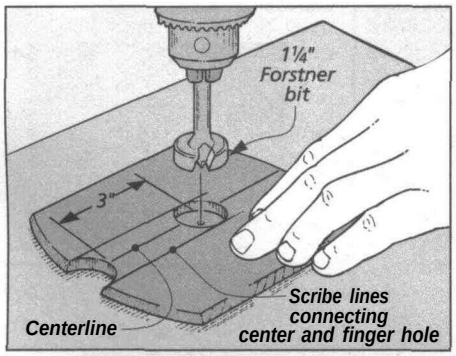

7 *Drill a shallow hole in the top of the lid to mark the end of the slot. Then scribe lay-out lines to the finger hole to mark the slot location for the insert.*

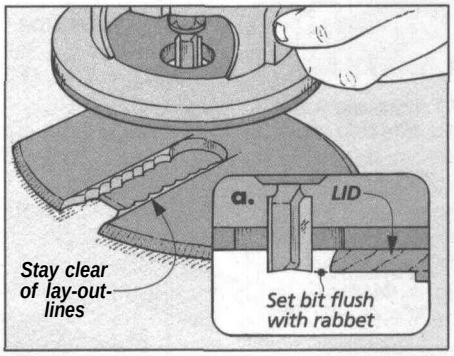

8 *Use a hand-held router and straight bit to remove most of the waste from the slot. Avoid hitting the lay-out lines. They're used later to guide your chisel.*

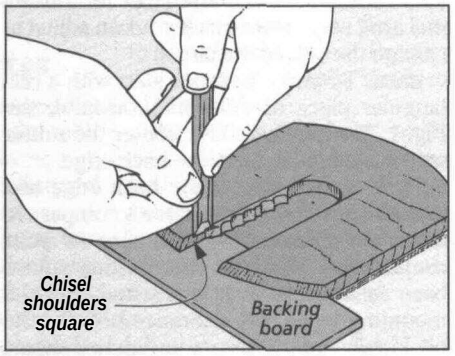

9 *After routing out the slot, use a chisel to remove the rest of the waste and square up the sides. Carefully pare away the wood, cutting up to the scribed lines.*

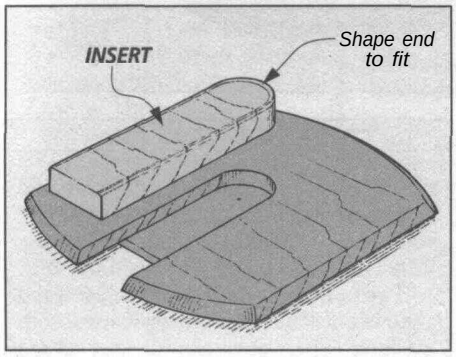

10 *To fit the insert in the lid start with a blank piece longer than needed but just a bit wider. Then sand the sides and radius on the end to get a tight fit.*

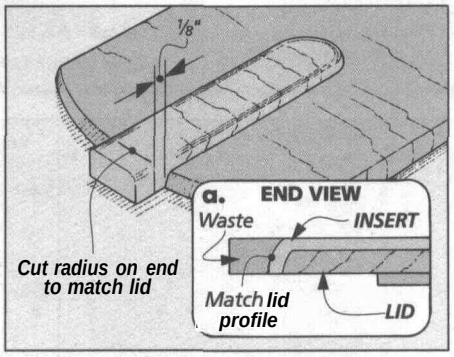

11 *Cut the insert to length so that it extends past the edge of the lid by 1/8". This matches the height the insert stands proud of the top of the lid.*

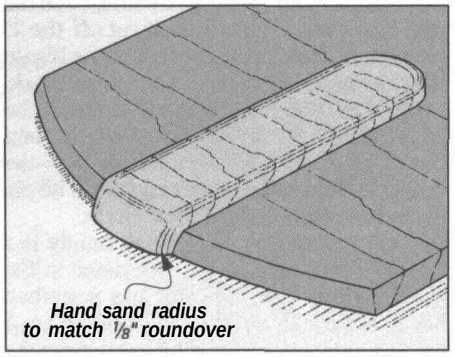

12 *Before gluing the insert into the slot, rout a 1/8"-radius on the top outside edge. But don't rout near the end of the insert. It's safer to sand by hand.*

Router Trammel

An aluminum trammel arm allows you to accurately rout circles up to eight feet in diameter.

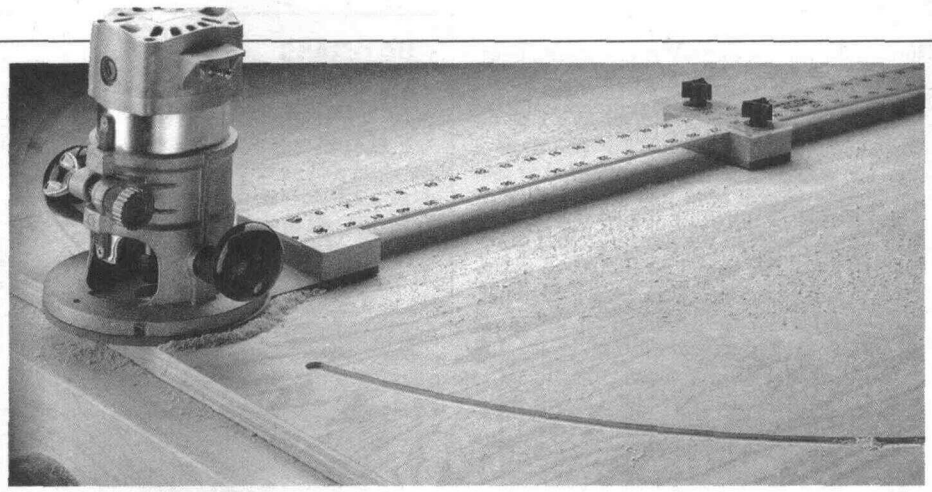

When I first saw this router trammel, what caught my eye was the aluminum ruler used for a trammel arm. The design, sent in by **Charles Gray** of Lyons, Colorado, solves two problems I've always had with building large trammels.

First, it's lightweight but still strong. And second, you can quickly and accurately set the size of the radius. Editor's note: The aluminum ruler is inexpensive and readily available at most hardware stores.

This jig consists of three pieces: a base for your router, an aluminum ruler for a trammel arm, and a pivot block you can adjust to change the size of the circle.

BASE. To build the base, start with a rectangular piece of ¼"-thick Masonite, see Fig. 1. The idea here is to center the router on the base, 6" in from the back edge.

First, measure from the back edge and mark a centerpoint. Then use a compass to draw a diameter the same size as your router base. Now use the existing router base as a template to mark and drill the mounting holes and clearance hole for the bit. Finally, cut the base to its finished shape.

To complete the base, a mounting block is attached to the back edge, see Exploded View. This is just a ¾"-thick piece of hardwood (maple) with a wide dado cut in the top to accept the ruler. To be safe, I started with an extra-long blank then cut off the 2" long block. Note: Save the rest of the blank. It can be used later to make the pivot block.

PIVOT BLOCK. All that's left to finish the jig is to make the pivot block. Use a 2" long piece from the leftover blank for the bracket. Then add a spacer and pin. The pin fits in the center hole of your circle.

What makes this pivot block handy is a Plexiglas indicator on top, see detail in Exploded View. This indicator has a scribed line to accurately set the radius of the jig. A pair of plastic knobs (or wing nuts) locks the pivot block to the trammel arm once the size of the radius is set.

ASSEMBLY. With the pivot block and base complete, you can assemble the jig and calibrate it for accuracy. This is simply a matter of attaching the trammel arm to the mounting block on the base with a couple of screws, see Exploded View.

But to make the jig accurate when using the indicator, you'll have to use the same dimension that was used to center the router on the base earlier. Since I centered the router at 6", I aligned the 6" mark on the ruler with the back back edge of the mounting block and screwed it in place. Finally, cut off the end of the trammel arm that sticks out past the mounting block.

Note: Keep in mind that the jig cuts to the center of your bit. Different size bits will cut different size circles. ❑

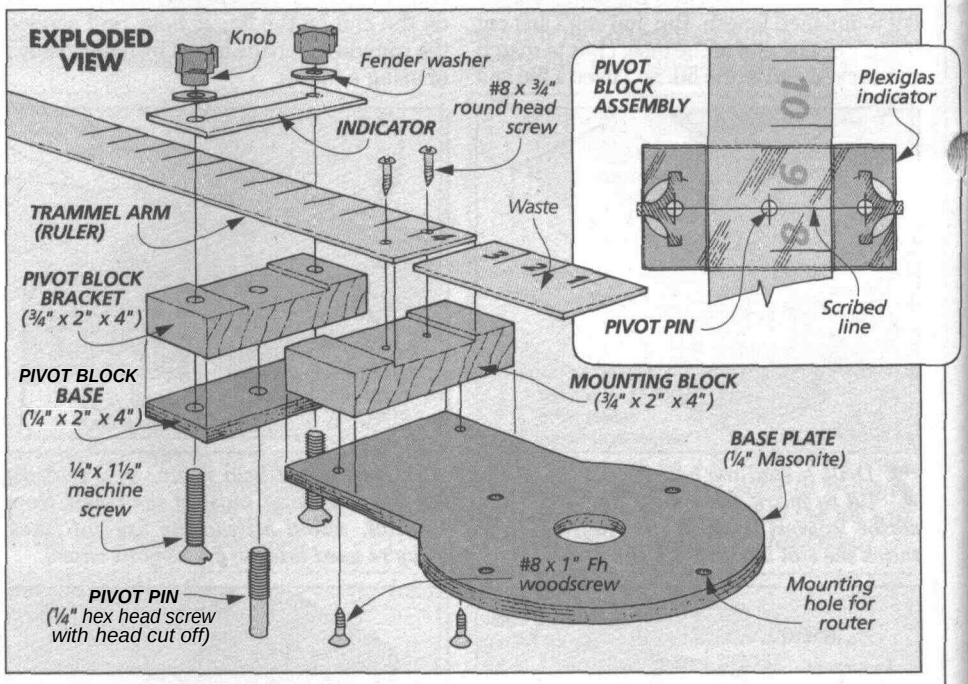

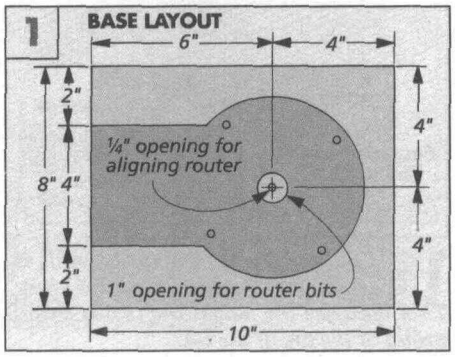

FEATURE YOUR JIG

If you've built an *original* jig and would like to see it featured on this page, send your idea to *Woodsmith*, Reader's Jig, 2200 Grand Ave., Des Moines, IA 50312.

If we publish it, we'll send you $100 and a full set of *Woodsmith* back issues, with binders. (This set retails for over $300.) Include a sketch (or photo) of your jig and explain how it's used. And *please* include a daytime phone number.

Sources

COTTAGE WALL CABINET

To build the cottage wall cabinet shown on page 6, you'll need the following hardware:

- (1 pair) 3/8" Inset Hinges, Antique Brass
- (7) #6 x 1½" Fh Woodscrews
- (7) #8 x 2" Fh Woodscrews
- (1) 1¼"-dia. Wood Knob
- (1) Magnetic Catch & Plate
- (8) Spoon-style Shelf Pins
- (3) Shaker Pegs (optional)

This or similar hardware is available from local hardware stores as well as the woodworking catalogs listed in the mail order sources below.

FINISHES

A number of finishes were used on the projects in this issue.

WALL CABINET. On one version of the cottage wall cabinet, I simply applied a couple coats of General Finishes' Royal Finish. This is a wipe-on oil/urethane finish.

Woodsmith Project Supplies is currently offering General Finishes' Royal Finish.

W98-4003-602 Royal Finish (Satin) ..... $11.95 quart

For the wall cabinet shown on page 6, I first applied three coats of Minwax's Winter White Pastel Stain. Then I applied a coat of Early American stain and wiped off the excess immediately. This process highlighted the pores of the wood. Minwax products are available at local hardware stores and home centers.

TOWER BOOKCASE. I decided to stain the tower bookcase on page 18. Note: Usually, I don't stain cherry. As it ages, cherry naturally develops a rich, reddish-brown patina.

The reason I used a stain on this project was because of the plywood sides. Cherry plywood will darken like solid cherry. But when the edges of the plywood are covered with edging strips, the strips often don't match the color of the plywood exactly. Staining the whole piece will even out the color.

I stained the bookcase with Bartley's Pennsylvania Cherry Gel Stain, see the sources below. Then I added a couple coats of General Finishes' Royal Finish.

DESK CLOCK. The desk clock on page 14, probably won't get handled all that much. So you really don't need to work too hard at giving it a protective finish. A couple coats of an oil finish are more than enough.

SMALL BOX. On the other hand, I figured the small box on page 26 would get a lot of handling. So I didn't want to use just an oil finish. But I also didn't want the mess of brushing on a finish either. So I applied a couple coats of a spray-on finish, like Deft Clear Wood Finish (available at local hardware stores and home centers).

DESK CLOCK

To build the desk clock on page 14, all you need is a clock movement, four #4 x 3/4" flathead woodscrews and a few scraps of wood. (We used mahogany.)

The clock movement we used was battery-operated. (We bought ours from Woodcraft, see sources below.) It had a 2¾"-dia. face and a 2⅜"-dia. body.

Just be sure you've got your clock *before* you begin building. That way, the opening can be cut to match the clock movement exactly. The same or similar clock movements are also available from the mail order sources listed below.

FINISHING FIXES

If you have some damaged finishes to fix (and who doesn't), there are plenty of places you can go for more information and finishing repair supplies.

BOOKS. Before you jump into finishing repair, it's a good idea to understand as much as you can about finishes in the first place. There are a couple books that I've found helpful. Though these books are about finishing in general, both include a chapter devoted to finishing repairs.

The first is *Understanding Wood Finishing* by Bob Flexner, published by Rodale Press, see mail order sources below. It clearly explains each type of finish, but more than that, it walks you through the process of applying each. There's even a chapter that includes a variety of recipes for finishing the most common woods.

Another book you may want to check out is *The Woodfinishing Book*, by Michael Dresdner, published by Taunton Press, see mail order sources below.

WORKSHOPS. If you'd like personal instruction in repairing damaged finishes, a couple finishing companies offer workshops, see sources below. But I should warn you. These are designed for professionals in the furniture business, so they tend to be rather expensive. But they will give you in-depth, hands-on experience.

PRODUCTS. Whether you're interested in paste wax, stains, touch-up markers, or burn-in sticks, most woodworking catalogs include at least some products for repairing finishes, see the sources listed below.

HOW TO ORDER

To order a project kit from *Woodsmith Project Supplies*, use our Toll Free order line. It's open Monday through Friday, from 7 AM to 7 PM Central Time.

Before calling, please have your VISA, MasterCard, or Discover Card ready.

If you would like to mail an order in, call the number below for more information on shipping charges and any applicable sales tax.

1-800-444-7527

Note: Prices subject to change after August, 1995

MAIL ORDER SOURCES

Similar hardware and supplies may be found in the following catalogs. Please call each company for a catalog or information.

Klockit
800-556-2548
Clack movements, Bartley's finishes

Mohawk Finishing Products
800-545-0047
Repair Workshops

Star Finishing Products
800-323-5390
Repair Workshops

Woodcraft
800-225-1153
Clock movements, Bartley's finishes, Finishing book & Repair supplies

Woodworker's Hardware
800-383-0130
Cabinet hardware

Constantine's
800-223-8087
Cabinet hardware, Clock movements, Bartley's finishes, Finishing books & Repair supplies

Precision Movements
800-533-2024
Clock movements

The Woodworkers' Store
800-279-4441
Cabinet hardware, Bartley's finishes, Finishing repair supplies

Woodworker's Supply
800-645-9292
Cabinet hardware, Bartley's finishes, Finishing books & Repair supplies

WoodNet

COMPUTER BULLETIN BOARD FOR WOODWORKERS

- Project Plans to Download
- Woodworking Techniques Forum
- Finishing Techniques Forum
- Back Issue Indexes for *Woodsmith* & *ShopNotes*
- For PC and Mac
- FREE First Month

To log on to WoodNet, set your communication program to 8 data bits, 1 stop bit, no parity, full duplex, and ANSI terminal emulation. Then call 1-515-245-9663.

If you have any questions, give us a call: 515-282-7000 M-F 9-5 CST

A LAST LOOK

Final Details

Tower Bookcase ***page 18***
This easy-to-build bookcase offers a maximum amount of storage space in a minimum amount of floor space.

Wall Cabinet ***page 6***
To create an "antique" look, we used a special two-step finishing process on this cabinet.
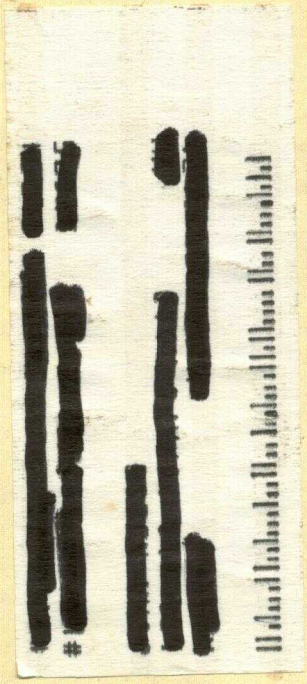
Desk Clock ***page 14***
A press-in clock movement requires a large flat-bottomed hole. But with this design no special drill bit is needed.